Circuit-breakers LZM1, 2, 3, 4 up to 1600 A

Reliably and safely controlling, switching and managing power, in industry, in buildings and in machine construction. Enabled by innovative protection concepts.

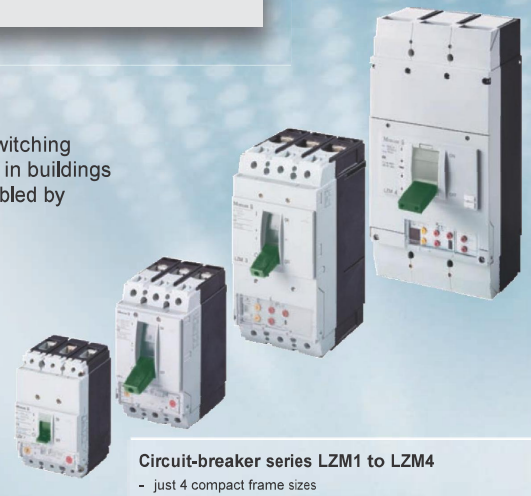

Circuit-breaker series LZM1 to LZM4

- just 4 compact frame sizes
- available as 3 and 4-pole device
- now also up to 1600 A
- flexible mounting using modular function groups
- full rated current at 50 °C ambient temperature
- switch suitable for world-wide use

Page 6

Standard/trip-indicating auxiliary contact from the Titan range

- reduced number of variants and stockholding requirement
- simple front installation at the same position
- simple clip-on feature saves mounting costs
- attractively priced identical parts from the control circuit device range

Page 42

Door coupling rotary handles

- identical drilling template for all variants
- innovative automatic centring
- axis support for long-term reliable operation
- side-wall operation ensuring space-saving main switch installation

Page 54

Remote operators

- common functional concept of all variants
- low closing delays 60 ms to 100 ms
- locking and sealing features provide security

Page 64

Moeller SK1230-1176GB

Circuit-breakers, switch-disconnectors from 15 to 1600 A

	Page
System overview	
Circuit-breakers	2
Technical overview	4
Ordering	
Circuit-breaker thermo-magnetic release, 3-pole	6
Circuit-breaker, magnetic short-circuit releases, 3 pole	8
Circuit-breaker, electronic releases, 3 pole	10
Circuit-breaker thermo-magnetic release, 4-pole	12
Circuit-breakers, electronic releases, 4 pole	16
Connection types	20
Plug-in units	40
Withdrawable units	41
Auxiliary contact with screw terminals	42
Undervoltage release with screw terminals	44
Undervoltage release, off-delayed	49
Shunt release with screw terminals	50
Door coupling rotary handles	54
Rotary handles	56
Rotary handles with door interlock	57
Main switch assembly kit	58
Accessories	60
Mechanical interlock	62
Multi-function device adapter	63
Accessories	64
Insulated enclosures	66
Residual-current release frequency response	68
Engineering	
Selectivity: incoming circuit-breaker, outgoing circuit-breaker	70
MCB, backup protection	74
Direction of blow-out, minimum clearances, tube cable lugs	75
Auxiliary switches, trip-indicating auxiliary contacts	76
Mechanical interlock for (door-coupling) rotary handle	77
Mechanical interlock for remote operator, residual-current relay	78
Sizes 1, 2: tripping characteristics	79
Sizes 2, 3: tripping characteristics	80
Sizes 3, 4: tripping characteristics	81
Frame size 1: let-through characteristics	82
Frame size 2: let-through characteristics	83
Sizes 1, 3: let-through characteristics	84
Sizes 2, 3: let-through characteristics	85
Frame size 2: residual-current release frequency response	86
Technical data	
Circuit-breakers	88
Temperature influence	92
Effective power loss	94
Terminal capacities	96
Auxiliary contact	98
Equipping with auxiliary contacts, time differences	99
Undervoltage release, shunt release,	100
Remote operator, capacitor unit	101
Residual current relay	102
Residual current release	104
Dimensions	
Size 1: basic units	106
Size 1: accessories	107
Size 2: basic units	115
~~Size 2: accessories~~	116
~~Size 3: basic units~~	127
~~Size 3: accessories~~	128
~~Size 4: basic units~~	137
Size 4: accessories	138

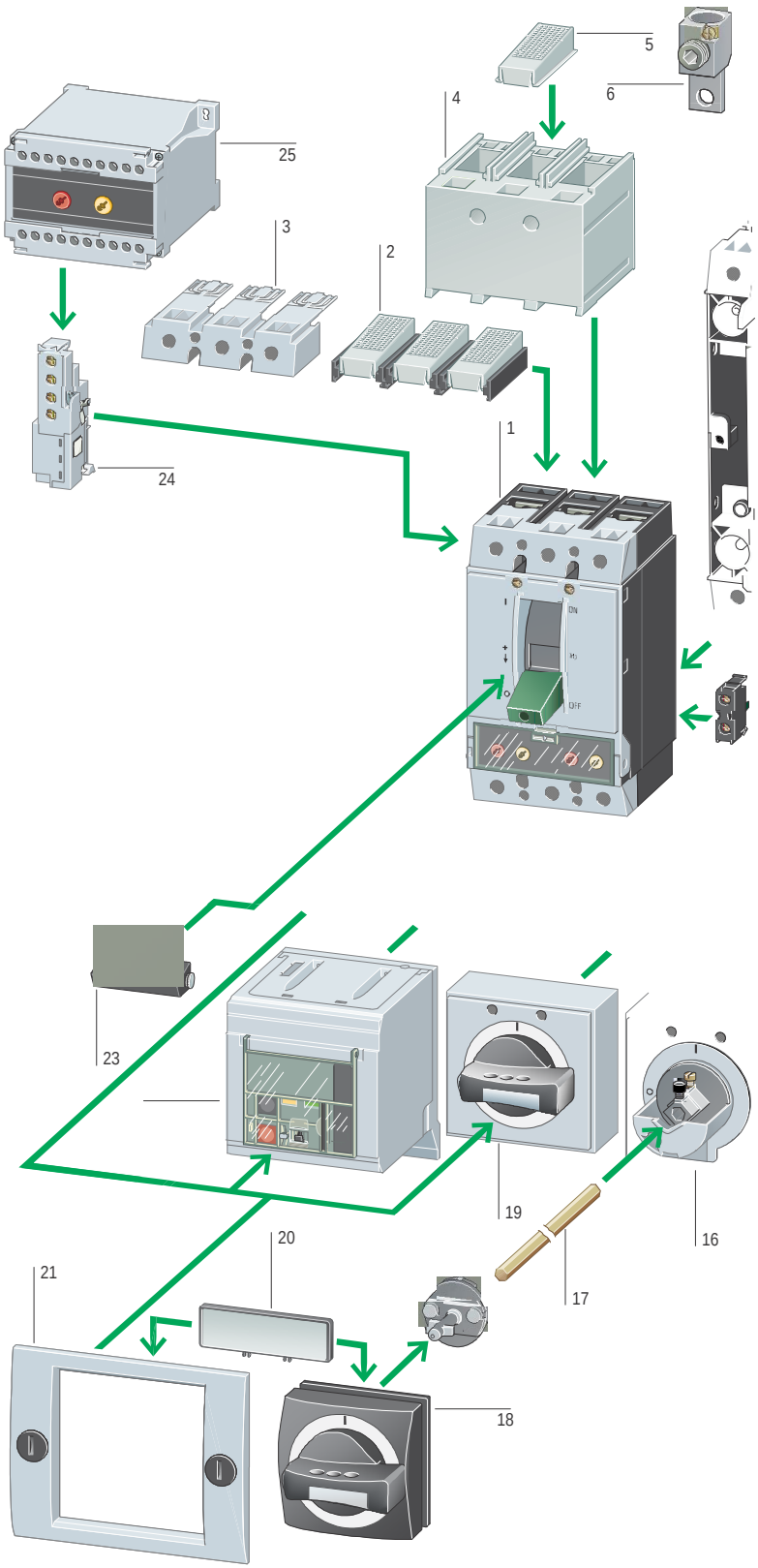
5
6
4
25
3
2
1
24
23
19
16
20
21
17
18

Basic units

Circuit-breaker 1
Rated uninterrupted current up to 1600 A
Switching capacity 25, 36, 50, 70 kA at 415 V
Adjustable releases for overload and short-circuit
Adjustable time selectivity
Earth-fault protection
Protection of systems, cables, motors, generators
3 and 4 pole versions,IEC/EN 60947, CCC
a page 6

Add-on functions

Standard auxiliary contact (HIN) 13
Switching with the main contacts. Used for indication and interlock functions.
a page 42

Trip-indicating auxiliary contact (HIA) 13
General trip indication '+', when tripped by voltage release, overload release or short-circuit release
a page 42

Early-make auxiliary contacts 24
For interlocking and load shedding circuits, as well as for early make of the undervoltage release in main switch/Emergency-stop applications
a page 42

Voltage release 24
Undervoltage release
Non-delayed
OFF-delayed
Shunt release
a page 44

Delay unit for undervoltage release 25
a page 49

Rear drive 14
a page 60

Door coupling rotary handle 16, 18
Lockable
With door interlock
a page 54

Main switch rotary handle for side panel mounting 15
a page 58

Extension shaft 17
Can be cut to required length.
a page 54

Rotary handle 19
Lockable
a page 56

Remote operator 22
For remote switching of circuit-breakers and switch-disconnectors
a page 64

Toggle lever interlock device 23
a page 61

Mounting accessories

Control circuit terminal 8
For two terminals at top or bottom
LZM1 a page 23
LZM2 a page 27
LZM3 a page 31
LZM4 a page 39

Tunnel terminals for Al and Cu cable 6
Standard with control circuit terminal
LZM1 a page 21
LZM2 a page 25
LZM3 a page 31
LZM4 a page 37

Box terminals 7
Standard version of frame size 1 assembled within the circuit-breaker enclosure
LZM1 a page 21
LZM2 a page 25
LZM3 a page 29

Terminal cover 4
Protection against direct contact where cable lugs, busbars or tunnel terminals are used
LZM1 a page 23
LZM2 a page 27
LZM3 a page 32
LZM4 a page 39

Terminal cover, knockout 3
LZM1 a page 23
LZM2 a page 27
LZM3 a page 32
LZM4 a page 39

Clip plate 10
NZM1-XC35 for 35 mm top-hat rail
NZM2-XC75 for 75 mm top-hat rail
a page 61

Rear connection 11
LZM1 a page 21
LZM2 a page 25
LZM3 a page 31
LZM4 a page 37

Plug-in and withdrawable unit 9
a page 40

Insulating surround 21
For use with toggle lever, rotary drive and remote operator protruding from the enclosure
a page 61

External warning plate/designation label 20
a page 60

Spacer 12
a page 61

IP2X protection against contact with a finger 2
For box terminals
LZM1 a page 23
LZM2 a page 27
LZM3 a page 32

IP2X protection against contact with a finger 5
For barrier
LZM1 a page 23
LZM2 a page 27

Circuit-breaker

With main switch characteristics to IEC/EN 60204 and isolating characteristics to IEC/EN 60947, CCC

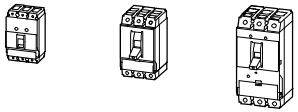

Rated uninterrupted current I_u = Rated current I_n
Adjustable overload release I_r
Adjustable short-circuit release I_i
Delayed short-circuit release I_{sd}

Thermomagnetic releases
System and cable protection

I_u A	I_u A		I_r A	I_i A
Ambient temperature at 100% I_u min./max. -25 / +50 °C	20	20	0.8 – 1 x I_n	350
	25	25		
	32	32		
	40	40		8 – 10 x I_n
	50	50		6 – 10 x I_n
	63	63		
	80	80		
	100	100		
	125	125 250		
	160	160 320		LZM1: 8 x I_n 6 – 10 x I_n
		200 400		
		250 **500**		
		300		

Comfort switching capacity			LZMC1-A...		LZMC2-A...		LZMC3-A...	
	400/415 V	kA/cos v	36	0.25	36	0.25	36	0.25
	440 V	kA/cos v	30	0.25	30	0.25	30	0.25
	525 V	kA/cos v	12	0.5	12	0.5	12	0.5
	690 V	kA/cos v	8	0.5	8	0.5	8	0.5

LZMS2-A-...		LZMS3-A-...	
70	0.20	70	0.20
65	0.20	65	0.20
36	0.25	36	0.25
20	0.30	25	0.30

s are rated ultimate short-circuit breaking capacities (I_{cu})

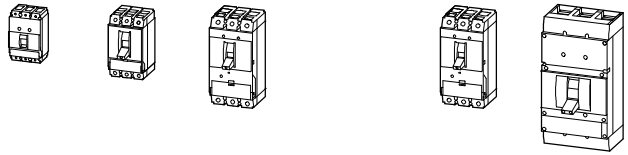

Magnetic short-circuit release
Motor protection

Electronic releases
Systems, cable, selectivity and generator protection

I_u A	I_u A	I_u A	I_i A	I_u A	I_u A	I_r A	I_{sd} A	I_i A
						0.5 – 1 x I_n	2 – 10 x I_r	2 – 12 x I_n
				400	800			
				630	1000			
40			8 – 14 x I_n		1250			
50					1600			
63							2 – 6 x I_r	2 – 8 x I_r
80								
100								
	125	250						
	160	320						
	200	400						
		500						

LZMC1-S...		LZMC2-S...		LZMC3-S...	
36	0.25	36	0.25	36	0.25
30	0.25	30	0.25	30	0.25
12	0.50	12	0.25	12	0.25
8	0.50	8	0.50	8	0.50

LZMS1-S-...		LZMS2-S...		LZMS3-S...		LZMS3-...E...		LZMS4-...E...	
70	0.20	70	0.20	70	0.20	70	0.20	70	0.20
35	0.25	65	0.20	65	0.20	65	0.20	65	0.20
20	0.30	36	0.25	36	0.25	36	0.25	36	0.25
10	0.50	20	0.30	25	0.30	25	0.30	35	0.25

Rated current = rated uninterrupted current $I_n = I_u$ A	Setting range: Overload releases I_r A	Setting range: Short-circuit releases I_i A	Comfort switching capacity **36 kA** at 415 V 50/60 Hz: **Part no.** Article no.	Price see price list
Protection of systems and cables				
3 pole				
Terminals standard, terminal screws as accessories				
20	15…20	350	**LZMC1-A20** 109432	
25	20…25	350	**LZMC1-A25** 109433	
32	25…32	350	**LZMC1-A32** 109434	
40	32…40	320…400	**LZMC1-A40** 109435	
50	40…50	300…500	**LZMC1-A50** 109436	
63	50…63	380…630	**LZMC1-A63** 109437	
80	63…80	480…800	**LZMC1-A80** 109438	
100	80…100	600…1000	**LZMC1-A100** 109439	
125	100…125	750…1250	**LZMC1-A125** 109440	
160	125…160	1280	**LZMC1-A160** 109441	
Terminal screws standard, terminals as accessories				
20	15…20	350		
25	20…25	350		
32	25…32	350		
40	32…40	320…400		
50	40…50	300…500		
63	50…63	380…630		
80	63…80	480…800		
100	80…100	600…1000		
125	100…125	750…1250		
160	125…160	960…1600	**LZMC2-A160** 109526	
200	160…200	1200…2000	**LZMC2-A200** 109527	
250	200…250	1500…2500	**LZMC2-A250** 109528	
300	240…300	1500…2500	**LZMC2-A300** 109529	
250	200…250	1500…2500	**LZMC3-A250** 109597	
320	250…320	1920…3200	**LZMC3-A320** 109598	
400	320…400	2400…4000	**LZMC3-A400** 109599	
500	400…500	3000…5000	**LZMC3-A500** 109600	

Notes Notes for terminals a 21

Strong switching capacity **70 kA** at 415 V 50/60 Hz: **Part no.** Article no.	Price see price list	Std. pack	Notes
LZMS1-A20 109452		1 off	IEC/EN 60947-2 Adjustable overload releases I_r • 0.8 – 1 × I_r (ex-works 0.8 × I_n) Adjustable short-circuit releases I_i • 6 – 10 × I_n (ex-works 6 × I_n) – LZM...-A40: 8 – 10 × I_n (ex-works 8 × I_n) Fixed short-circuit release I_i • 350 A at I_n = 20 – 32 A • 1280 A at I_n = 160 A (LZM1)
LZMS1-A25 109453			
LZMS1-A32 109454			
LZMS1-A40 109455			
LZMS1-A50 109456			
LZMS1-A63 109457			
LZMS1-A80 109458			
LZMS1-A100 109459			
LZMS1-A125 109460			
LZMS1-A160 109461			
LZMS2-A20 109534		1 off	
LZMS2-A25 109535			
LZMS2-A32 109536			
LZMS2-A40 109537			
LZMS2-A50 109538			
LZMS2-A63 109539			
LZMS2-A80 109540			
LZMS2-A100 109541			
LZMS2-A125 109542			
LZMS2-A160 109543			
LZMS2-A200 109544			
LZMS2-A250 109545			
LZMS2-A300 109546			
LZMS3-A250 109605			
LZMS3-A320 109606			
LZMS3-A400 109607			
LZMS3-A500 109608			

Rated current = rated uninterrupted current $I_n = I_u$ A	Setting range Short-circuit releases I_i A	Motor rating AC-3 at 400 V 50/60 Hz P kW	Rated operational current AC-3 at 400 V 50/60 Hz I_e A	Comfort switching capacity **36 kA** at 415 V 50/60 Hz **Part no.** Article no.	**Price** see price list
Short-circuit protection					
Motor protection in conjunction with overload relay • With short-circuit release • Without overload release					
3 pole					
Terminals standard, terminal screws as accessories					
40	320…560	18.5	36	**LZMC1-S40** 109467	
50	400…700	22	41	**LZMC1-S50** 109468	
63	504…882	30	55	**LZMC1-S63** 109469	
80	640…1120	37	68	**LZMC1-S80** 109470	
100	800…1250	55	99	**LZMC1-S100** 109471	
Terminal screws standard, terminals as accessories					
40	320…560	18.5	36		
50	400…700	22	41		
63	504…882	30	55		
80	640…1120	37	68		
100	800…1400	55	99		
125	1000…1750	55	99	**LZMC2-S125** 109550	
160	1280…2240	75	134	**LZMC2-S160** 109551	
200	1600…2500	110	196	**LZMC2-S200** 109552	
250	2000…3500		250	**LZMC3-S250** 109609	
320	2560…4480		320	**LZMC3-S320** 109610	
400	2800…5000		400	**LZMC3-S400** 109611	
500	3000…5000		450	**LZMC3-S500** 109612	

Notes Notes for terminals a 21

Strong switching capacity **70 kA** at 415 V 50/60 Hz **Part no.** Article no.	**Price** see price list	Std. pack	**Notes**
LZMS1-S40 109477		1 off	IEC/EN 60947-4-1 and IEC/EN 60947-2 The circuit-breaker fulfills all requirements for AC-3 switching category. Adjustable short-circuit releases I_i • 8 – 14 × I_n (ex-works 12 × I_n) – LZM...1-S100, LZM...2-S200: 8 – 12.5 × I_n (ex-works 12 × I_n) Without overload release I_r – LZM...3-S400: 7 – 12.5 × I_n – LZM...3-S500: 6 – 10 × I_n
LZMS1-S50 109478			
LZMS1-S63 109479			
LZMS1-S80 109480			
LZMS1-S100 109481			
LZMS2-S40 109556		1 off	**Selection** of circuit-breakers without overload release when combining with ZEV electronic motor-protective relay: The tripping response of the ZEV motor-protective relay is matched by setting of the tripping class (CLASS), to the starting behaviour of the motor to be protected.
LZMS2-S50 109557			
LZMS2-S63 109558			
LZMS2-S80 109559			
LZMS2-S100 109560			
LZMS2-S125 109561			
LZMS2-S160 109562			
LZMS2-S200 109563			
LZMS3-S250 109617			
LZMS3-S320 109618			
LZMS3-S400 109619			
LZMS3-S500 109620			

	I_n in A	**Maximum permissible tripping class CLASS**
LZM...1-S...	40	30
	50	30
	63	30
	80	20
	100	15
LZM...2-S...	40	30
	50	30
	63	30
	80	30
	100	30
	125	30
	160	20
	200	10
LZM...3-S...	250	30
	320	30
	400	30
	500	20

Tripping class	**Tripping time T_p with load on all poles of 7.2 times current setting value**
10 A	2 s < T_p F 10 s
10	4 s < T_p F 10 s
20	6 s < T_p F 20 s
30	9 s < T_p F 30 s

Motor-starter combination of classification types 1 and 2 can be found in the "Fuseless motor-starter combinations" section of the Main Catalogue.

Rated current = rated uninterrupted current	Setting range					
	Overload releases	Short-circuit releases				
		Non-delayed	Delayed short-circuit release			
$I_n = I_u$	I_r	I_i	I_{sd}			
A	A	A	A			
Protection of systems and cables						
3 pole						
Terminal screws standard, terminals as accessories						
400	200…400	800…4400				
630	315…630	1260…5040				
800	400…800	1600…9600				
1000	500…1000	2000…12000				
1250	630…1250	2500…15000				
1600	800…1600	3200…19200				
Systems and cable protection, selectivity and generator protection						
3 pole						
Terminal screws standard, terminals as accessories						
400	200…400	800…4400	400…4000			
630	315…630	1260…5040	472…4410			
800	400…800	1600…9600	800…8000			
1000	500…1000	2000…12000	1000…10000			
1250	630…1250	2500…15000	1250…12500			
1600	800…1600	3200…19200	1600…16000			

Notes Notes for terminals a 29

Strong switching capacity **70 kA** at 415 V 50/60 Hz

Part no. Article no.	Price see price list	Std. pack	Notes
LZMS3-AE400 109641		1 off	IEC/EN 60947-2 Adjustable overload releases I_r • 0.5 – 1 x I_n (ex-works 0.8 x I_n) R.m.s. value measurement and "thermal memory" Adjustable short-circuit releases I_i • LZM...3-AE400: 2 – 11 x I_n (ex-works 6 x I_n) • LZM...3-AE630: 2 – 8 x I_n (ex-works 6 x I_n) • LZM...4-AE...: 2 – 12 x I_n (ex-works 6 x I_n)
LZMS3-AE630 109642			
LZMS4-AE800 110946			
LZMS4-AE1000 110947			
LZMS4-AE1250 110948			
LZMS4-AE1600 110949			
LZMS3-VE400 109653		1 off	IEC/EN 60947-2 Adjustable overload releases I_r • 0.5 – 1 x I_n (ex-works 0.8 x I_n) R.m.s. value measurement and "thermal memory" Adjustable time delay setting to overcome current peaks t_r • 2 … 20 s with 6 x I_r as well as infinity (without overload release) (ex-factory 10 s) Adjustable delayed short-circuit releases I_{sd} • 2 – 10 x I_r (ex-works 6 x I_r) – LZM…3-VE630: 1.5 – 7 x I_r (ex-works 6 x I_r) Adjustable delay time t_{sd} • Steps: 0, 20, 60, 100, 200, 300, 500, 750, 1000 ms (ex-works 0 ms) Adjustable non-delayed short-circuit releases I_i • LZM…3-VE400: 2 – 11 x I_n (ex-works 6 x I_n) • LZM…3-VE630: 2 – 8 x I_n (ex-works 6 x I_n) • LZM…4-VE….: 2 – 12 x I_n (ex-works 12 x I_n) i^2t constant function • LZM3, LZM4 switched (ex-works OFF)
LZMS3-VE630 109654			
LZMS4-VE800 110964			
LZMS4-VE1000 110965			
LZMS4-VE1250 110966			
LZMS4-VE1600 110967			

xEnergy **LZM...1** Moeller SK1230-1176GB http://catalog.moeller.net

Rated current = rated uninterrupted current $I_n = I_u$ A	Setting range: Overload releases, Main pole I_r A	Overload releases, Neutral conductor I_r A	Short-circuit releases I_i A	Comfort switching capacity **36 kA** at 415 V 50/60 Hz: **Part no.** Article no.	**Price** see price list	Strong switching capacity **70 kA** at 415 V 50/60 Hz: **Part no.** Article no.	**Price** see price list	Std. pack	**Notes**
Protection of systems and cables									
4 pole									
Terminals standard, terminal screws as accessories									
20	15…20	15…20	350	**LZMC1-4-A20** 109492		**LZMS1-4-A20** 109512		1 off	IEC/EN 60947-2
25	20…25	20…25	350	**LZMC1-4-A25** 109493		**LZMS1-4-A25** 109513			Adjustable overload releases I_r • 0.8 – 1 x I_n (ex-works 0.8 x I_n)
32	25…32	25…32	350	**LZMC1-4-A32** 109494		**LZMS1-4-A32** 109514			Setting on neutral pole implemented via the main pole setting I_r of the main pole.
40	32…40	32…40	320…400	**LZMC1-4-A40** 109495		**LZMS1-4-A40** 109515			Adjustable short-circuit releases I_i • 6 – 10 x I_n (ex-works 6 x I_n) – LZM…1-4-A40: 8 – 10 x I_n (ex-works 8 x I_n)
50	40…50	40…50	300…500	**LZMC1-4-A50** 109496		**LZMS1-4-A50** 109516			
63	50…63	50…63	380…630	**LZMC1-4-A63** 109497		**LZMS1-4-A63** 109517			Fixed short-circuit release I_i • 350 A at I_n = 20 – 32 A • 1280 A at I_n = 160 A (8 x I_n)
80	63…80	63…80	480…800	**LZMC1-4-A80** 109498		**LZMS1-4-A80** 109518			
100	80…100	80…100	600…1000	**LZMC1-4-A100** 109499		**LZMS1-4-A100** 109519			LZM..1-4-A… • With 100 % overload and short-circuit protection in 4th pole
125	100…125	100…125	750…1250	**LZMC1-4-A125** 109500		**LZMS1-4-A125** 109520			
160	125…160	125…160	1280	**LZMC1-4-A160** 109501		**LZMS1-4-A160** 109521			

Notes Notes for terminals 21

http://catalog.moeller.net Moeller SK1230-1176GB **LZM...1** xEnergy

Circuit-breakers

Rated current = rated uninterrupted current	Setting range Overload releases Main pole	Setting range Overload releases Neutral conductor	Short-circuit releases	Comfort switching capacity **36 kA** at 415 V 50/60 Hz **Part no.** Article no.	**Price** see price list
$I_n = I_u$	I_r	I_r	I_i		
A	A	A	A		
Protection of systems and cables					
4 pole					
Terminal screws standard, terminals as accessories					
20	15…20	15…20	350		
25	20…25	20…25	350		
32	25…32	25…32	350		
40	32…40	32…40	320…400		
50	40…50	40…50	300…500		
63	50…63	50…63	380…630		
80	63…80	63…80	480…800		
100	80…100	80…100	600…1000		
125	100…125	100…125	750…1250		
160	125…160	125…160	960…1600	**LZMC2-4-A160** 109570	
160	125…160	80…100	960…1600	**LZMC2-4-A160/100** 109571	
200	160…200	160…200	1200…2000	**LZMC2-4-A200** 109572	
200	160…200	100…125	1200…2000	**LZMC2-4-A200/125** 109573	
250	200…250	200…250	1500…2500	**LZMC2-4-A250** 109574	
250	200…250	125…160	1500…2500	**LZMC2-4-A250/160** 109575	
320	250…320	250…320	1920…3200	**LZMC3-4-A320** 109621	
320	250…320	160…200	1920…3200	**LZMC3-4-A320/200** 109622	
400	320…400	320…400	2400…4000	**LZMC3-4-A400** 109623	
400	320…400	200…250	2400…4000	**LZMC3-4-A400/250** 109624	
500	400…500	400…500	3000…5000	**LZMC3-4-A500** 109625	
500	400…500	250…320	3000…5000	**LZMC3-4-A500/320** 109626	

Notes Notes for terminals a 25

Strong switching capacity **70 kA** at 415 V 50/60 Hz **Part no.** Article no.	**Price** see price list	Std. pack	**Notes**
LZMS2-4-A20 109582		1 off	IEC/EN 60947-2 Adjustable overload releases I_r • 0.8 – 1 × I_n (ex-works 0.8 × I_n) Setting on neutral pole implemented via the main pole setting I_r of the main pole. Adjustable short-circuit releases I_i • 6 – 10 × I_n (ex-works 6 × I_n) Fixed short-circuit release I_i • 350 A at I_n = 20 – 32 A LZM..2/3-4-A… • With 100 % overload and short-circuit protection in 4th pole LZM..2/3-4-A…/60 • With 60 % overload and short-circuit protection in 4th pole
LZMS2-4-A25 109583			
LZMS2-4-A32 109584			
LZMS2-4-A40 109585			
LZMS2-4-A50 109586			
LZMS2-4-A63 109587			
LZMS2-4-A80 109588			
LZMS2-4-A100 109589			
LZMS2-4-A125 109590			
LZMS2-4-A160 109591			
LZMS2-4-A160/100 109592			
LZMS2-4-A200 109593			
LZMS2-4-A200/125 109594			
LZMS2-4-A250 109595			
LZMS2-4-A250/160 109596			
LZMS3-4-A320 109633			
LZMS3-4-A320/200 109634			
LZMS3-4-A400 109635			
LZMS3-4-A400/250 109636			
LZMS3-4-A500 109637			
LZMS3-4-A500/320 109638			

Rated current = rated uninterrupted current	Setting range Overload releases Main pole	Setting range Overload releases Neutral conductor	Short-circuit releases
$I_n = I_u$	I_r	I_r	I_i
A	A	A	A
Protection of systems and cables			
4 pole			
Terminal screws standard, terminals as accessories			
400	200…400	200…400	800…4400
400	200…400	125…250	800…4400
630	315…630	315…630	1260…5040
630	315…630	200…400	1260…5040
800	400…800	400…800	1600…9600
800	400…800	250…500	1600…9600
1000	500…1000	500…1000	2000…12000
1000	500…1000	315…630	2000…12000
1250	630…1250	630…1250	2500…15000
1250	630…1250	400…800	2500…15000
1600	800…1600	800…1600	3200…19200
1600	800…1600	500…1000	3200…19200

Notes Notes for terminals 29

Strong switching capacity **70 kA** at 415 V 50/60 Hz

Part no. Article no.	Price see price list	Std. pack	Notes
LZMS3-4-AE400 109647		1 off	IEC/EN 60947-2 Adjustable overload releases I_r • 0.5 – 1 x I_n (ex-works 0.8 x I_n) Setting on neutral pole implemented via the main pole setting I_r of the main pole. R.m.s. value measurement and "thermal memory" Adjustable short-circuit releases I_i • LZM...3-4-AE400: 2 – 11 x I_n (ex-works 6 x I_n) • LZM...3-4-AE630: 2 – 8 x I_n (ex-works 6 x I_n) • LZM...4-4-AE...: 2 – 12 x I_n (ex-works 6 x I_n) LZM...-4-AE... • With 100 % overload and short-circuit protection in 4th pole LZM...-4-AE.../... • With 60 % overload and short-circuit protection in 4th pole
LZMS3-4-AE400/250 109648			
LZMS3-4-AE630 109649			
LZMS3-4-AE630/400 109650			
LZMS4-4-AE800 110976			
LZMS4-4-AE800/500 110977			
LZMS4-4-AE1000 110978			
LZMS4-4-AE1000/630 110979			
LZMS4-4-AE1250 110980			
LZMS4-4-AE1250/800 110981			
LZMS4-4-AE1600 110982			
LZMS4-4-AE1600/1000 110983			

Rated current = rated uninterrupted current	Setting range Overload releases		Short-circuit releases					
	Main pole	Neutral conductor	Non-delayed	Delayed short-circuit release				
$I_n = I_u$	I_r	I_r	I_i	I_{sd}				
A	A	A	A	A				

Systems and cable protection, selectivity and generator protection

4 pole

Terminal screws standard, terminals as accessories

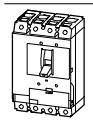

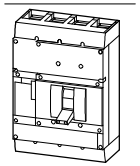

400	200…400	200…400	800…4400	400…4000			
400	200…400	125…250	800…4400	400…4000			
630	315…630	315…630	1260…5040	472…4410			
630	315…630	200…400	1260…5040	472…4410			
800	400…800	400…800	1600…9600	800…8000			
800	400…800	250…500	1600…9600	800…8000			
1000	500…1000	500…1000	2000…12000	1000…10000			
1000	500…1000	315…630	2000…12000	1000…10000			
1250	630…1250	630…1250	2500…15000	1250…12500			
1250	630…1250	400…800	2500…15000	1250…12500			
1600	800…1600	800…1600	3200…19200	1600…16000			
1600	800…1600	500…1000	3200…19200	1600…16000			

Notes Notes for terminals a 29

Strong switching capacity **70 kA** at 415 V 50/60 Hz

Part no. Article no.	Price see price list	Std. pack	Notes
LZMS3-4-VE400 109659		1 off	IEC/EN 60947-2 Adjustable overload releases I_r • 0.5 – 1 × I_n (ex-works 0.8 × I_n) Setting on neutral pole implemented via the main pole setting I_r of the main pole. R.m.s. value measurement and "thermal memory" Adjustable time delay setting to overcome current peaks t_r • 2 … 20 s with 6 × I_r as well as infinity (without overload release) (ex-factory 10 s) – LZM...3-4-VE630: 2 – 14 s at 6 × I_r also infinity (without overload release) Adjustable delayed short-circuit releases I_{sd} • 2 – 10 × I_r (ex-works 6 × I_r) – LZM...3-4-VE630: 1.5 – 7 × I_r (ex-works 6 × I_r) Adjustable delay time t_{sd} • Steps: 0, 20, 60, 100, 200, 300, 500, 750, 1000 ms (ex-works 0 ms) Adjustable non-delayed short-circuit releases I_i • LZM...3-4-VE400: 2 – 11 × I_n (ex-works 6 × I_n) • LZM...3-4-VE630: 2 – 8 × I_n (ex-works 6 × I_n) • LZM...4-4-VE...: 2 – 12 × I_n (ex-works 12 × I_n) i^2t constant function (ex-works OFF) • LZM3, LZM4 switched (ex-works OFF) LZM...-4-VE... • With 100 % overload and short-circuit protection in 4th pole LZM...-4-VE.../... • With 60 % overload and short-circuit protection in 4th pole
LZMS3-4-VE400/250 109660			
LZMS3-4-VE630 109661			
LZMS3-4-VE630/400 109662			
LZMS4-4-VE800 110992			
LZMS4-4-VE800/500 110993			
LZMS4-4-VE1000 110994			
LZMS4-4-VE1000/630 110995			
LZMS4-4-VE1250 110996			
LZMS4-4-VE1250/800 110997			
LZMS4-4-VE1600 110998			
LZMS4-4-VE1600/1000 110999			

	Max. cable connection area	For use with		Terminal capacities Type of conductor	mm²	AWG/kcmil
Box terminal Standard equipment						
		LZM1(-4)	Three- and four-pole	Cu cable	1 x 10 – 70[1)] 2 x 6 – 25	1 x 8 – 2/0 2 x 9 – 4
Screw connection						
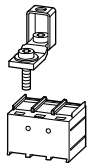	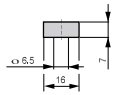	LZM1(-4)	Three- and four-pole	Copper cable lugs Aluminium cable lug	1 x 10 – 70 2 x 6 – 25 1 x 10 – 35 2 x 10 – 35	1 x 8 – 2/0 2 x 9 – 4 1 x 8 – 2 2 x 8 – 2
Tunnel terminal						
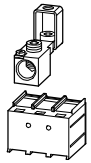		LZM1(-4)	Three- and four-pole	Copper cable Al cable	1 x 16 – 95	1 x 6 – 3/0 –
Connection on rear						
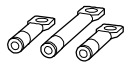	–	LZM1(-4)	Three- and four-pole	Copper cable lugs Aluminium cable lug	1 x 2.5 – 25 2 x 2.5 – 25 1 x 10 – 35 2 x 10 – 35	

Notes [1)] Up to 240 mm² can be connected depending on the cable manufacturer.

Terminal capacities Cu strip (number of segments x width x segment thickness) mm	Copper busbar width x thickness mm	**Part no.** Article no. when ordered separately		Std. pack	**Notes**
2 x 9 x 0.8 9 x 9 x 0.8		**NZM1-XKC** 260015		1 off	Standard connection with **all** switches LZM1. Conversion kit for circuit-breaker with screw connection. Type contains parts for a 3 or 4-pole switch side. Fitted within the switch housing
		NZM1-4-XKC 267075		1 off	
	min. 12 x 5 max. 16 x 5	**NZM1-XKS** 260019		1 off	Type contains parts for a terminal located at top or bottom for 3 or 4-pole circuit-breakers. Fitted outside the switch housing Mounting of the cover NZM1(-4)-XKSA obligatory (supplied).
	min. 12 x 5 max. 16 x 5	**NZM1-4-XKS** 266725		1 off	
		NZM1-XKA 266730		1 off	Type contains parts for a terminal located at top or bottom for 3 or 4-pole circuit-breakers. A standard with control circuit terminal for 1 x 0.75 – 2.5 mm² (18 – 14 AWG) or 2 x 0.75 – 1.5 mm² (18 – 14 AWG) copper conductors. Fitted outside the switch housing Use with flexible and highly flexible conductors ferrules. Maximum specified cross-section can only be connected when stranded and without ferrules. Mounting of the cover NZM1(-4)-XKSA obligatory (supplied).
		NZM1-4-XKA 266731		1 off	
	F 12 x 5 F 16 x 5	**NZM1-XKR** 266734		1 off	Type contains parts for a terminal located at top or bottom for 3 or 4-pole circuit-breakers.
		NZM1-4-XKR 266737		1 off	

	Max. cable connection area	For use with		Terminal capacities Type of conductor	mm²	AWG/kcmil	Part no. Article no. when ordered separately	Std. pack	Notes
Control circuit terminal									
	–	LZM1(-4)	Three- and four-pole	Screw connection	1 × 0.75 – 2.5 2 × 0.75 – 1.5	1 × 18 – 14 2 × 18 – 16	**NZM1-XSTS** 260150	1 off	Type contains parts for two terminal locations located at top or bottom for 3 or 4-pole circuit-breakers. Included as standard with tunnel terminal Degree of protection IP1X NZM-XSTK cannot be combined with NZM1(-4)-XIPK IP2X protection against contact with a finger. Height or thickness of the control terminals: NZM-XSTK = 2 mm NZM-XSTS = 2 mm
	–			Box terminal			**NZM-XSTK** 266739	1 off	
Cover									
	–	LZM1(-4)	3 pole				**NZM1-XKSA** 260021	1 off	Type contains parts for a terminal located at top or bottom for 3 or 4-pole circuit-breakers. Protection against direct contact where cable lugs, busbars or tunnel terminals are used Contained in kit with tunnel terminals or screw connection terminals. Degree of protection IP1X on the connection side when using insulated conductor material.
	–		4 pole				**NZM1-4-XKSA** 266741	1 off	
Terminal cover, knockout									
For box terminals									
	–	LZM1	3-pole				**NZM1-XKSFA** 100780	1 off	Type contains parts for a terminal located at top or bottom for 3 or 4 pole circuit-breakers. Enhancement of the protection against direct contact (simple finger protection).
	–	LZM1(-4)	4 pole				**NZM1-4-XKSFA** 100781	1 off	
IP2X protection against contact with a finger									
For box terminals									
	–	LZM1	3 pole				**NZM1-XIPK** 266744	1 off	Type contains parts for a terminal located at top or bottom for 3 or 4-pole circuit-breakers. Enhancement of the protection against direct contact to IP2X. Protection when reaching into the cable connection area with the connection of cables in the box terminal. Cannot be combined with NZM-XSTK control circuit terminal.
	–	LZM1(-4)	4 pole				**NZM1-4-XIPK** 266745	1 off	
For cover NZM1(-4)-XKSA									
	–	LZM1	3 pole				**NZM1-XIPA** 266748	1 off	Type contains parts for a terminal located at top or bottom for 3 or 4-pole circuit-breakers. Enhancement of the protection against direct contact to IP2X.
	–	LZM1(-4)	4 pole				**NZM1-4-XIPA** 266749	1 off	

	Max. cable connection area	For use with		Terminal capacities Type of conductor	Terminal capacities mm²	AWG/kcmil	Terminal capacities Cu strip (number of segments × width × segment thickness) mm
Box terminal							
	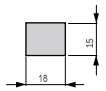	LZM2(-4)	Three- and four-pole	Copper conductors Cu cable	1 × 4 – 185 2 × 4 – 70	1 × 11 – 350 2 × 12 – 2/0	ƒ2 × 9 × 0.8
Screw connection							
Standard equipment							
	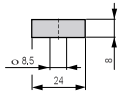	LZM2(-4)	Three- and four-pole	Copper cable lugs Aluminium cable lug	1 × 4 – 185 2 × 4 – 70 1 × 10 – 50 2 × 10 – 50	1 × 11 – 3/0 2 × 12 1 × 8 – 1/0 2 × 8 – 1/0	ƒ2 × 16 × 0.8
Tunnel terminal							
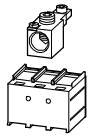		LZM2(-4)	Three- and four-pole	Copper cable Al cable	1 × 16 … 185 1 × 16 … 185	1 × 6 – 350 –	
Connection on rear							
When using cable lugs **without** NZM3(-4)-XKSA cover, they must be insulated.							
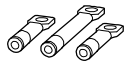		LZM2(-4)	Three- and four-pole	Copper cable lugs Aluminium cable lug	1 × 4 – 185 2 × 4 – 70 1 × 10 – 50 2 × 10 – 50		ƒ2 × 16 × 0.8 F 6 × 24 × 0.5

Notes [1] Up to 240 mm² can be connected depending on the cable manufacturer.

Copper busbar width × thickness mm	Part no. Article no. when ordered with basic unit	Part no. Article no. when ordered separately	Std. pack	Notes
	+NZM2-160-XKCO 262218	**NZM2-160-XKC** 262240	1 off	Type suffix and type contain parts for a circuit-breaker side at top or bottom for 3 or 4 pole circuit-breakers. Conversion kit for circuit-breaker with screw connection. Fitted within the switch housing O = for fitting at the top U = for fitting at the bottom U_e ƒ525 V AC: • Use cover NZM2(4)-XKSA. Use ferrules with flexible and highly flexible conductors. Max. cross section shown can only be connected when flexible and without ferrules.
	+NZM2-160-XKCU 262223			
	+NZM2-250-XKCO 262242	**NZM2-250-XKC** 262244		
	+NZM2-250-XKCU 262243			
	+NZM2-4-160-XKCO 266751	**NZM2-4-160-XKC** 266755		
	+NZM2-4-160-XKCU 266753			
	+NZM2-4-250-XKCO 266752	**NZM2-4-250-XKC** 266756		
	+NZM2-4-250-XKCU 266754			
ƒ16 × 5		**NZM2-XKS** 260030	1 off	Type contains parts for a terminal located at top or bottom for 3 or 4 pole circuit-breakers. Standard connection with all LZM2 circuit-breakers. Conversion kit for circuit-breaker with box terminal. Use special cable lug narrow version, a 27 Fitted within the switch housing If a busbar is used, insulation (400 mm) e.g sleeving and a NZM2(-4)-XKSA cover are required. U_e ƒ525 V AC: • For all other connection material a NZM2(-4)-XKSA shroud must be used.
		NZM2-4-XKS 266750	1 off	
		NZM2-XKA 271457	1 off	Type contains parts for a terminal located at top or bottom for 3 or 4-pole circuit-breakers. A standard with control circuit terminal for 1 × 0.75 – 2.5 mm² (18 – 14 AWG) or 2 × 0.75 – 1.5 mm² (18 – 16 AWG) copper conductors. Fitted outside the switch housing Use with flexible and highly flexible conductors ferrules. Maximum specified cross-section can only be connected when stranded and without ferrules. Mounting of the cover NZM2(-4)-XKSA obligatory (supplied).
		NZM2-4-XKA 271458	1 off	
ƒ16 × 5 F 20 × 5	**+NZM2-XKRO** 266763	**NZM2-XKR** 266765	1 off	Type suffix and type contain parts for a circuit-breaker side at top or bottom for 3 or 4-pole circuit-breakers. O = for fitting at the top U = for fitting at the bottom
	+NZM2-XKRU 266764	**NZM2-4-XKR** 266768		
	+NZM2-4-XKRO 266766			
	+NZM2-4-XKRU 266767			

	Max. cable connection area	For use with		Terminal capacities Type of conductor	Terminal capacities mm²	AWG/kcmil
Control circuit terminal						
		LZM2(-4)	Three- and four-pole	Screw connection	1 x 0.75 – 2.5 2 x 0.75 – 1.5	1 x 18 – 14 2 x 18 – 16
		LZM3(-4)	Three- and four-pole	Box terminal	1 x 0.75 – 2.5 2 x 0.75 – 1.5	1 x 18 – 14 2 x 18 – 16
Cover						
		LZM2	3 pole			
		LZM2(-4)	4 pole			
Connection cover, knockout						
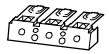		LZM2	3 pole			
		LZM2(-4)	4 pole			
IP2X protection against contact with a finger						
For box terminals						
		LZM2	3 pole			
		LZM2(-4)	4 pole			
For covers NZM2(-4)-XKSA or NZM2(-4)						
		LZM2	3 pole			
		LZM2(-4)	4 pole			
Copper cable lug						
When using cable lugs **without** NZM3(-4)-XKSA cover, they must be insulated.						
	95 mm²	LZM2(-4)	Three- and four-pole			
	120 mm²					
	150 mm²					
	185 mm²					

Copper busbar width x thickness mm	Part no. Article no. when ordered separately	Std. pack	Notes
	NZM2-XSTS 260156	1 off	Type contains parts for two terminal locations located at top or bottom for 3 or 4-pole circuit-breakers. Included as standard with tunnel terminal Degree of protection IP1X NZM-XSTK cannot be combined with NZM2(-4)-XIPK IP2X protection against contact with a finger. Height or thickness of the control circuit terminals: NZM-XSTK = 2 mm NZM-XSTS = 2 mm
	NZM-XSTK 266739	1 off	
	NZM2-XKSA 260038	1 off	Type contains parts for a terminal located at top or bottom for 3 or 4-pole circuit-breakers. Protection against direct contact where cable lugs, busbars or tunnel terminals are used Degree of protection IP1X on the connection side when using insulated conductor material.
	NZM2-4-XKSA 266770	1 off	
	NZM2-XKSFA 104640	1 off	Type contains parts for a terminal located at top or bottom for 3 or 4-pole circuit-breakers. Enhancement of the protection against direct contact (simplified protection against contact with a finger).
	NZM2-4-XKSFA 104641	1 off	
	NZM2-XIPK 266773	1 off	Type contains parts for a terminal located at top or bottom for 3 or 4-pole circuit-breakers. Enhancement of the protection against direct contact to IP2X. Protection when reaching into the cable connection area with the connection of cables in the box terminal. With 2 conductors minimum cross-section 25 mm². Cannot be combined with NZM-XSTK control circuit terminal.
	NZM2-4-XIPK 266774	1 off	
	NZM2-XIPA 266777	1 off	Type contains parts for a terminal located at top or bottom for 3 or 4-pole circuit-breakers. Enhancement of the protection against direct contact to IP2X.
	NZM2-4-XIPA 266778	1 off	
	KS95-NZM7 059775	3 off	Type contains a cable lug for 3-pole or 4-pole switches. Special cable lug, narrow style
	KS120-NZM7 059776		
	KS150-NZM7 059777		
	NZM2-XKS185 260032		

	Max. cable connection area	Rated current[1] I_n A	For use with		Terminal capacities: Type of conductor	Terminal capacities mm²	AWG/kcmil
Box terminal							
		max. 500 400 UL/CSA	LZM3(-4)	Three- and four-pole	Copper conductors Cu cable	1 x 35 – 240 2 x 16 – 120	1 x 2 – 500
		630				1 x 35 – 240 2 x 16 – 120	1 x 2 – 500
Screw connection							
	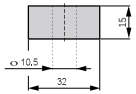	630	LZM3(-4)	Three- and four-pole	Copper cable lugs Aluminium cable lug	1 x 16 – 240 2 x 16 – 240 1 x 10 – 120 2 x 10 – 120	1 x 4 – 350 2 x 350
		max. 400					
Connection width extension							
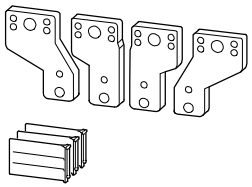		630	LZM3(-4)	Three- and four-pole	Copper cable lugs Aluminium cable lug	2 x 300	2 x 500

Notes [1] The following applies for the rated current: The values have been determined conform to IEC/EN 60947 (switchgear standard) and generally relate to the max. defined cross-sections and are intended for the purpose of orientation.

Terminal capacities: Cu strip (number of segments x width x segment thickness) mm	Copper busbar width x thickness mm	Part no. Article no. when ordered with basic unit	Part no. Article no. when ordered separately	Std. pack	Notes
Box terminal					
min. 6 x 16 x 0.8 max. 20 x 24 x 0.5 or max. 11 x 21 x 1		**+NZM3-XKCO** 262246	**NZM3-XKC** 260042	1 off	Type suffix and type contain parts for a circuit-breaker side at top or bottom for 3 or 4-pole circuit-breakers. Conversion kit for circuit-breaker with screw connection. Fitted within the switch housing O = for fitting at the top U = for fitting at the bottom U_e ≤ 525 V AC: • Use NZM3(-4)-XKSA cover. Use with flexible and highly flexible conductors ferrules, note the max. terminal capacity when using ferrules.
		+NZM3-XKCU 262245			
min. 6 x 16 x 0.8 max. 20 x 24 x 0.5 or max. 11 x 21 x 1		**+NZM3-4-XKCO** 266781	**NZM3-4-XKC** 266783		
		+NZM3-4-XKCU 266782			
Screw connection					
10 x 32 x 1.0 + 5 x 32 x 1.0	30 x 10 + 30 x 5		**NZM3-XKS** 260039	1 off	Type contains parts for a terminal located at top or bottom for 3 or 4-pole circuit-breakers. Standard connection with all LZM3 circuit-breakers. Conversion kit for circuit-breaker with box terminal. Use special cable lugs narrow version, a 32 Fitted within the switch housing When a busbar is used insulation is required (400 mm) e.g. using heat shrink and a shroud NZM3(-4)-XKSA. U_e ≤ 525 V AC: A shroud NZM3(-4)-XKSA must be used with all other connection types.
			NZM3-4-XKS 266780	1 off	
Connection width extension					
(2 x) 10 x 50 x 1.0	(2 x) 10 x 50		**NZM3-XKV70** 100514	1 off	Type contains parts for a terminal located at top or bottom for 3 or 4 pole circuit-breakers. Central drill holes, e.g. for up to 2 cable lugs per phase. Can be fitted to circuit-breaker with screw termination Phase isolator supplied. Distance between pole centres with NZM3(-4)-XKV70: 70 mm Drill hole available for control cable. Connection terminals NZM3(-4)-XK300 and NZM3(-4)-XK22X21 can be installed.
			NZM3-4-XKV70 100515	1 off	

	Max. cable connection area	Rated current[1] I_n A	For use with		Terminal capacities: Type of conductor	Terminal capacities mm²	AWG/kcmil
Terminals for connection width extension							
		max. 500	LZM3	3 pole	Cu cable	1 x 120 – 300	
			LZM3(-4)	4 pole			
		630	LZM3	3 pole			
			LZM3(-4)	4 pole			
Tunnel terminal							
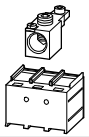	–	max. 350	LZM3(-4)	Three- and four-pole	Copper conductors Cu cable Al conductors Al cable	1 x 16 – 185[2]	1 x 6 – 350 –
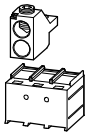	–	max. 630				1 x 50 – 240 2 x 50 – 240	1 x 0 – 500 2 x 0 – 500
Connection on rear							
not UL/CSA approved							
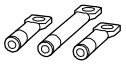		max. 630	LZM3(-4)	Three- and four-pole	Copper cables Cu cable	1 x 16 – 240 2 x 16 – 240	
		max. 500	–	–		1 x 10 – 120 2 x 10 – 120	
Control circuit terminal							
		–	LZM3(-4)	Three- and four-pole	Screw connection	1 x 0.75 – 2.5 2 x 0.75 – 1.5	1 x 18 – 14 2 x 18 – 16
		–	LZM3(-4)		Box terminal		

Notes

[1] The following applies for the rated current: The values have been determined conform to IEC/EN 60947 (switchgear standard) and generally relate to the max. defined cross-sections and are intended for the purpose of orientation.
The engineering standards which apply in each case must be observed.

Terminal capacities: Cu strip (number of segments x width x segment thickness) mm	Copper busbar width x thickness mm	**Part no.** Article no. when ordered with basic unit	**Part no.** Article no. when ordered separately	Std. pack	**Notes**
			NZM3-XK300 100782	1 off	Type contains parts for a terminal located at top or bottom for 3 or 4-pole circuit-breakers. Only in conjunction with connection width extension NZM3(-4)-XKV70. Use with flexible and highly flexible conductors ferrules. Standard with control circuit terminal for 1 x 0.75 – 2.5 mm² or 2 x 0.75 – 1.5 mm² copper conductors.
			NZM3-4-XK300 100783	1 off	
(2 x) 11 x 21 x 1.0			**NZM3-XK22X21** 100784	1 off	
(2 x) 11 x 21 x 1.0			**NZM3-4-XK22X21** 100785	1 off	
			NZM3-XKA1 271459	1 off	Type contains parts for a terminal located at top or bottom for 3 or 4-pole circuit-breakers. A standard with control circuit terminal for 1 x 0.75 – 2.5 mm² (18 – 14 AWG) or 2 x 0.75 – 1.5 mm² (18 – 16 AWG) copper conductors. Fitted outside the switch housing. Use with flexible and highly flexible conductors ferrules. Maximum specified cross-section can only be connected when stranded and without ferrules. Mounting of the cover NZM3(-4)-XKSA obligatory (supplied).
			NZM3-4-XKA1 271460	1 off	
			NZM3-XKA2 271461	1 off	
			NZM3-4-XKA2 271462	1 off	
		+NZM3-XKRO 266790	**NZM3-XKR** 266792	1 off	Type suffix and type contain parts for a circuit-breaker side at top or bottom for 3 or 4-pole circuit-breakers. O = for fitting at the top U = for fitting at the bottom
		+NZM3-XKRU 266791	**NZM3-4-XKR** 266795	1 off	
		+NZM3-4-XKRO 266793			
		+NZM3-4-XKRU 266794			
min.6 x 16 x 0.8 Max. 10 x 32 x 1.0	Min. 20 x 5 Max. 30 x 10				
			NZM3/4-XSTS 266797	1 off	Type contains parts for two terminal locations located at top or bottom for 3 or 4 pole circuit-breakers. Included as standard with tunnel terminal. Degree of protection IP1X. Height or thickness of the control circuit terminals NZM-XSTS = 2 mm
			NZM-XSTK 266739		

		Max. cable connection area	For use with		Part no. Article no. when ordered separately	Std. pack	Notes
Cover							
	–	–	LZM3(-4)	3 pole	**NZM3-XKSA** 260045	1 off	Type contains parts for a terminal located at top or bottom for 3 or 4-pole circuit-breakers. Insulation/protection against direct contact where cable lugs, busbars or tunnel terminals are used. Included in set with tunnel terminals Degree of protection IP1X on the connection side when using insulated conductor material.
	–	–		4 pole	**NZM3-4-XKSA** 266801	1 off	
Phase isolator							
	–	–	LZM3(-4)	3 pole	**NZM3-XKP** 100512	1 off	Type contains parts for a terminal located at top or bottom for 3 or 4 pole circuit-breakers. Included with the connection width extension. Cannot be combined with the NZM3(-4)-XKA tunnel terminal, NZM3(-4)-XKR connection on rear. Insulation protection with connection of cable lugs, busbars or braid.
	–	–		4 pole	**NZM3-4-XKP** 100513	1 off	
Connection cover, knockout							
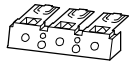	–	–	LZM3(-4)	3 pole	**NZM3-XKSFA** 104642	1 off	Type contains parts for a terminal located at top or bottom for 3 or 4-pole circuit-breakers. Enhancement of the protection against direct contact to (simplified protection against contact with a finger).
	–	–		4 pole	**NZM3-4-XKSFA** 104643	1 off	
IP2X protection against contact with a finger							
		–	LZM3(-4)	3 pole	**NZM3-XIPK** 266804	1 off	Type contains parts for a terminal located at top or bottom for 3 or 4-pole circuit-breakers. Enhancement of the protection against direct contact to IP2X. Protection when reaching into the cable connection area with the connection of cables in the box terminal. With 2 conductors minimum cross-section 70 mm². Cannot be combined with NZM-XSTK control circuit terminal.
				4 pole	**NZM3-4-XIPK** 266805	1 off	
For cover NZM3(-4)-XKSA							
		–	LZM3(-4)	3 pole	**NZM3-XIPA** 266808	1 off	Type contains parts for a terminal located at top or bottom for 3 or 4-pole circuit-breakers. Enhancement of the protection against direct contact to IP2X.
		–		4 pole	**NZM3-4-XIPA** 266809	1 off	
Copper cable lug							
When using cable lugs **without** NZM3(-4)-XKSA cover, they must be insulated.							
	185 mm²	–	LZM3(-4) LZM4(-4)	3 and 4 pole	**NZM3-XKS185** 260040	3 off	Type contains a cable lug for 3-pole or 4-pole switches. Special cable lug, narrow style
	900 mm²	–		3 and 4 pole	**NZM3-XKS240** 260041	3 off	

		Max. cable connection area	Rated current[1] I_n A	For use with		Terminal capacities: Type of conductor	Terminal capacities mm²	AWG/kcmil
Screw connection								
Standard equipment								
	2-hole	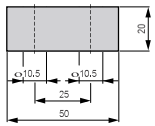	max. 1250	LZM4(-4)	Three- and four-pole	Cu cable lugs	1 x 120 – 185 4 x 50 – 185	1 x 250 – 350 4 x 0 – 350
			1600					
	3-hole	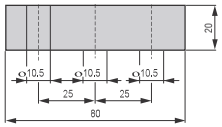	2000	LZM4	3 pole	Cu cable lugs		
Module plate								
	Single hole		max. 1250	LZM4	3 pole	Copper cable lugs	1 x 120 – 300 2 x 95 – 300	1 x 250 – 600 2 x 000 – 600
				LZM4-4	4 pole			
	Double hole		max. 1400	LZM4	3 pole	Copper cable lugs	2 x 95 – 185 4 x 35 – 185 4 x 50	2 x 000 – 350 4 x 2 – 350
				LZM4-4	4 pole			
	Double		max. 1250	LZM4	3 pole	Copper cable	2 x 95 – 300	2 x 000 – 600

Terminal capacities: Cu strip (number of segments x width x segment thickness) mm	Copper busbar width x thickness mm	**Part no.** Article no. when ordered separately	Std. pack	**Notes**
Screw connection				
Standard equipment				
(2 x) 10 x 50 x 1.0	(2 x) 50 x 10		off	Double hole fitting for M10 screws with 25 mm clearance. Use special cable lug narrow version. U_e ≤ 525 V or cross-section > 185 mm²: Use of shroud NZM4(-4)-XKSA required.
			off	
	(2 x) 80 x 10		off	Triple hole fitting for M10 screws with 25 mm pitch. Phase divider for insultion above is supplied.
Module plate				
(2 x) 10 x 40 x 1.0 (2 x) 10 x 50 x 1.0	(2 x) 40 x 10 (2 x) 50 x 10	**NZM4-XKM1** 266814	1 off	Type contains parts for a terminal located at top or bottom for 3 or 4-pole circuit-breakers. For M10 screws. Can be enlarged for M12 screws. Use special cable lug narrow version. Can be fitted to circuit-breaker with screw termination Insulation through NZM4(-4)-XKSA cover or NZM4(-4)-XKP phase separator necessary
		NZM4-4-XKM1 266815	1 off	
		NZM4-XKM2 266820	1 off	
		NZM4-4-XKM2 266821	1 off	
		NZM4-XKM2S-		Type contains parts for a terminal located at top or bottom for 3 or

SA or phase isolator

ed at top or bottom for 3 or

ugs per phase.
rew termination

ZM4(-4)-XKV95: 95 mm
former up to 130 mm width

ZM4-XKV110: 107.5 mm
former up to 135 mm width

ZM4-4-XKV120: 122 mm
former up to 164 mm width

rminal available.

	Max. cable connection area	Rated current[1] I_n A	For use with		Terminal capacities Type of conductor	Terminal capacities mm²	AWG/kcmil
Flat cable terminal							
–		max. 1100	LZM4	3 pole			
–			LZM4-4	4 pole			
Tunnel terminal							
–		max. 1400	LZM4	3 pole	Copper conductors Cu cable Al conductors Al cable	1 x 50 – 240 4 x 50 – 240 1 x 50 – 240 4 x 50 – 240	1 x 0 – 500 4 x 0 – 500 1 x 0 – 500 4 x 0 – 500
–	22.5		LZM4-4	4 pole			
Connection on rear							
–		max. 1250	LZM4(-4)	Three- and four-pole	Copper cable lugs Aluminium cable lug	1 x 120 – 185 2 x 95 – 185 4 x 35 – 185 1 x 185 2 x 70 – 185 4 x 50 – 185	
–		1600		–			

Notes [1] The following applies for the rated current: The values have been determined conform to IEC/EN 60947 (switchgear standard) and generally relate to the max. defined cross-sections and are intended for the purpose of orientation.

Terminal capacities Cu strip (number of segments x width x segment thickness) mm	Copper busbar width x thickness mm	**Part no.** Article no. when ordered separately	Std. pack	**Notes**
min.6 x 16 x 0.8 max. (2 x) 10 x 32 x 1.0		**NZM4-XKB** 266829	1 off	Type contains parts for a terminal located at top or bottom for 3 or 4-pole circuit-breakers. Conversion kit for circuit-breaker with screw connection. Insulation through cover NZM4(-4)-XKSA or phase isolator NZM4(4)-XKP necessary. With switch mpunting on conductive mounting plates use of the shroud NZM4(-4)-XKSA necessary (supplied item).
min.6 x 16 x 0.8 max. (2 x) 10 x 32 x 1.0		**NZM4-4-XKB** 266831	1 off	
		NZM4-XKA 266836	1 off	Type contains parts for a terminal located at top or bottom for 3 or 4 pole circuit-breakers. A standard with control circuit terminal for 1 x 0.75 … 2.5 mm² (18 … 14 AWG) or 2 x 0.75 … 1.5 mm² (18 … 16 AWG) copper conductors. Can be fitted to circuit-breaker with screw termination Use ferrules with flexible and highly flexible conductors. Max. cross section shown can only be connected when flexible and without ferrules. Use of the NZM4(-4)-XKSA cover obligatory(supplied).
		NZM4-4-XKA 266837	1 off	
(2 x) 10 x 50 x 1.0	(2 x) 50 x 10	**NZM4-XKR** 266842	1 off	Type contains parts for a terminal located at top or bottom for 3 or 4-pole circuit-breakers. Can also be retrofitted: NZM4...-XKM... module plate or NZM4-...-XKV... connection width extension
		NZM4-4-XKR 266843	1 off	
			off	

	Max. cable connection area	For use with		Terminal capacities			Part no. Article no. when ordered separately	Std. pack	Notes
				Type of conductor	Terminal capacities mm²	AWG/kcmil			
Control circuit terminal									
–		LZM3(-4)	Three- and four-pole	Screw connection	1 x 0.75 – 2.5 2 x 0.75 – 1.5	1 x 18 – 14 2 x 18 – 16	**NZM3/4-XSTS** 266797	1 off	Type contains parts for two terminal locations located at top or bottom for 3 or 4 pole circuit-breakers. Included as standard with tunnel terminal Degree of protection IP1X Height or thickness of the control circuit terminals NZM-XSTS = 2 mm
Cover									
–		LZM4	3 pole				**NZM4-XKSA** 266846	1 off	Type contains parts for a terminal located at top or bottom for 3 or 4 pole circuit-breakers. Protection against direct contact where cable lugs, busbars, flat cable terminals or tunnel terminals are used. With module plates, flat braid terminals and tunnel terminals included in the kit. When using insulated conductor material to degree of protection: IP1X.
–		LZM4-4	4 pole				**NZM4-4-XKSA** 266847		
Connection cover, knockout									
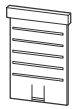 –		LZM4	3 pole				**NZM4-XKSFA** 292193	1 off	Type contains parts for a terminal located at top or bottom for 3 or 4-pole circuit-breakers. Enhancement of the protection against direct contact to (simplified protection against contact with a finger).
–		LZM4-4	4 pole				**NZM4-4-XKSFA** 292194		
Phase isolators									
–		LZM4	3 pole				**NZM4-XKP** 281595	1 off	Type contains parts for a terminal located at top or bottom for 3 or 4-pole circuit-breakers. Included with the connection width extension. Cannot be combined with the tunnel terminal NZM4(-4)-XKA, connection NZM4-XKR on rear. Insulation protection where cable lugs, busbars, module plates or flat cable terminals are used.
–		LZM4-4	4 pole				**NZM4-4-XKP** 281596		
Cable lug									
185 mm²		LZM3(-4) LZM4(-4)	3 and 4 pole				**NZM3-XKS185** 260040	3 off	Type contains a cable lug for 3-pole or 4-pole switches. Special cable lug, narrow style
900 mm²							**NZM3-XKS240** 260041		

xEnergy **NZM2-XSV...** Moeller SK1230-1176GB http://catalog.moeller.net

	For use with	Number of poles	Part no. Article no. when ordered with basic unit	Price see price list	Part no. Article no. when ordered separately	Price see price list	Std. pack	Notes
Plug-in and withdrawable units								
For circuit-breakers LZM								
Plug-in adapter elements Complete Only in combination with circuit-breaker								
Terminal screws standard, terminals as accessories								
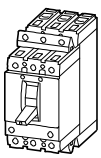	LZM2-4	4 pole	**+NZM2-4-XSV** 266698				1 off	$I_{nmax.}$ at: 20 °C: 250 A 40 °C: 230 A (LZM...2-...) Mounting position: vertical, 90° right, 90° left Order control circuit plug unit separately!
	LZM2	3 pole	**+NZM2-XSV** 266697					
Sockets e.g. for reserved slots Retrofit of circuit-breaker with plug-in module.								
Terminal screws standard, terminals as accessories								
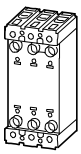	LZM2	3 pole			**NZM2-XSVS** 266699		1 off	
	LZM2-4	4 pole			**NZM2-4-XSVS** 266700			
Removable module Fits socket base Only in combination with circuit-breaker								
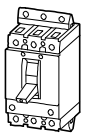	LZM2	3 pole	**+NZM2-XSVE** 266701				1 off	
	LZM2-4	4 pole	**+NZM2-4-XSVE** 266702					
Control circuit plug unit								
	LZM2(-4)	for auxiliary contact, shunt/undervoltage release			**NZM2-XSVHI** 266705		1 off	–
	LZM2(-4)	for remote operator			**NZM2-XSVR** 266706			–

	For use with	Number of poles	Part no. Article no. when ordered with basic unit	Price see price list	Part no. Article no. when ordered separately	Price see price list	Std. pack	Notes
Withdrawable unit with control circuit plug unit For circuit-breakers LZM								
Withdrawable unit with auxiliary plug-in adapter Complete Only in combination with circuit-breaker								
Terminal screws standard, terminals as accessories								
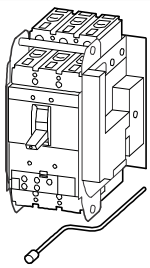	LZM3	3 pole	**+NZM3-XAV** 266707				1 off	$I_{nmax.}$ at: 20 °C: 605 A (LZM3), 1600 A (LZM4) 40 °C: 550 A (LZM3), 1500 A (LZM4) Mounting position LZM3: vertical, 90 ° left LZM4: vertical 3 positions Connected, test, disconnected The 3 positions are indicated mechanically. Additionally, auxiliary contacts are use for remote signalling. An optional M22-(C)K01normally closed contact or M22-(C)K10 normally open contact per position Also see the RMQ-Titan control circuit device range in the Main Catalogue All connections of auxiliary switches (HIA, HIN, HIV) and voltage releases to the control circuit plug units are already present.
	LZM3-4	4 pole	**+NZM3-4-XAV** 266708					
	LZM4	3 pole	**+NZM4-XAV** 266709					
	LZM4-4	4 pole	**+NZM4-4-XAV** 266710					
Socket base e.g. for reserved slots Retrofit of circuit-breaker with withdrawable carrier.								
Terminal screws standard, terminals as accessories								
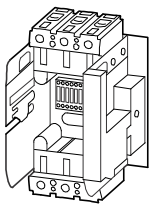	LZM3	3 pole			**NZM3-XAVS** 266711		1 off	
	LZM3-4	4 pole			**NZM3-4-XAVS** 266712			
	LZM4	3 pole			**NZM4-XAVS** 266713			
	LZM4-4	4 pole			**NZM4-4-XAVS** 266714			
Withdrawable carrier								
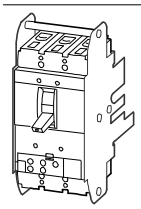	LZM3	3 pole	**+NZM3-XAVE** 266715				1 off	
	LZM3-4	4 pole	**+NZM3-4-XAVE** 266716					
	LZM4	3 pole	**+NZM4-XAVE** 266717					
	LZM4-4	4 pole	**+NZM4-4-XAVE** 266718					

		For use with	Auxiliary contacts: ⚠ = safety function, by positive opening to IEC/EN 60947-5-1 N/O = Normally open	N/C = Normally closed	Contact sequence	Part no. Article no. when ordered separately	Price see price list
Auxiliary contacts							
Standard auxiliary contact (HIN) Switching with the main contacts Used for indicating and interlocking tasks							
		LZM1(-4), 2(-4), 3(-4), 4(-4)	1 N/O			**M22-K10** 216376	
				1 N/C ⚠		**M22-K01** 216378	
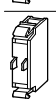	With 3 m connection cable instead of screw termination.	LZM1(-4), 2(-4), 3(-4), 4(-4)	1 N/O	1 N/C ⚠			
			2 N/O				
				2 N/C ⚠			
Early-make auxiliary contact For interlocking and load shedding circuits, as well as for early make of the undervoltage release in main switch/Emergency-Stop applications							
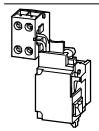	With clamp terminal on the left-hand switch side.	LZM1(-4)	2 N/O			**NZM1-XHIV** 259426	
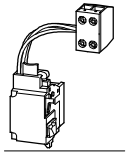	With clamp terminal on the right-hand switch side.		2 N/O			**NZM1-XHIVR** 292195	
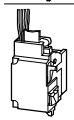	With 3 m connection cable instead of screw termination.		2 N/O				
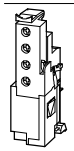		LZM2(-4), 3(-4)	2 N/O			**NZM2/3-XHIV** 259430	
		LZM4(-4)	2 N/O			**NZM4-XHIV** 266172	
Trip indicating auxiliary contact (HIA), (HIAFI) General trip indication '+', when tripped by voltage release, overload release, short-circuit release or by the residual-current release due to residual-current.							
		LZM1(-4), 2(-4), 3(-4), 4(-4)	1 N/O			**M22-K10** 216376	
				1 N/C ⚠		**M22-K01** 216378	
	With 3 m connection cable instead of screw termination.	LZM1(-4), 2(-4), 3(-4), 4(-4)	1 N/O	1 N/C ⚠			
			2 N/O				
				2 N/C ⚠			

	Part no. Article no. when ordered separately	Price see price list	Std. pack	Notes	Notes
	M22-CK10 216384		20 off	For Std. pack: M22-(C)K... : Std. pack = 20 off	The following can be dipped into the switches: • LZM1 - one standard auxiliary contact • LZM2 - up to 2 standard auxiliary contacts M22-(C)K… • LZM3 and LZM4 - up to 3 standard auxiliary contacts M22-(C)K… Any combinations of the auxiliary contact types ispossible. Marking on switch: HIN
	M22-CK01 216385		20 off		
	M22-CK11 107940		20 off		
	M22-CK20 107898				
	M22-CK02 107899				
			1 off		Not in conjunction with NZM…-XU… undervoltage release or NZM…-XA… shunt release Early make with switch on and switch off (manual actuation): approx. 20 ms
					Not in conjunction with undervoltage release NZM…-XU, shunt release NZM…-XA… or remote operator NZM…-XR… Early make with switch on (manual actuation): approx. 90 ms
	M22-CK10 216384		20 off	For Std. pack: M22-(C)K... : Std. pack = 20 off	The following can be dipped into the switches: • LZM1 - one trip-indicating auxiliary switch • LZM2 - one M22-(C)K… trip-indicating auxiliary switch • LZM3 - one M22-(C)K… trip-indicating auxiliary switch • LZM4 - up to two M22-(C)K… trip-indicating auxiliary switches Any combinations of the auxiliary contact types is possible. Marking on switch: HIA Labeling in FI-Block: HIAFI. If the trip-indicating auxiliary contact in the fault-current block is used, the N/C contacts operates as a N/O contact and the N/C contact operates as an N/O contact (circuit symbol)
	M22-CK01 216385				
	M22-CK11 107940				
	M22-CK20 107898				
	M22-CK02 107899				

		For use with	Rated control voltage U_s V	Part no. Article no. when ordered separately	Price see price list	Std. pack	Notes
Undervoltage releases							
Without auxiliary contact Non-delayed disconnection of LZM circuit-breakers when the control voltage sinks below 35 – 70% U_s. For use with Emergency-Stop devices in conjunction with Emergency-Stop button.							
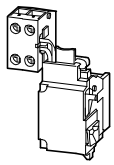	With clamp terminal on the left-hand switch side.	LZM1(-4)	24 V 50/60 Hz	**NZM1-XU24AC** 259434		1 off	When the undervoltage release is de-energized, accidental contact with the main contacts of the switch during attempts to switch on, is safely prevented . Undervoltage release cannot be installed simultaneously with NZM...-XHIV... early-make auxiliary contact or NZM...-XA... shunt release.
			110 V – 130 V 50/60 Hz	**NZM1-XU110-130AC** 259440			
			208 V 240 V 50/60 Hz	**NZM1-XU208-240AC** 259442			
			380 V – 440 V 50/60 Hz	**NZM1-XU380-440AC** 259444			
			480 V – 525 V 50/60 Hz	**NZM1-XU480-525AC** 259446			
			600 V 50/60 Hz	**NZM1-XU600AC** 259448			
			12 V DC	**NZM1-XU12DC** 259450			
			24 V DC	**NZM1-XU24DC** 259452			
			110 V – 130 V DC	**NZM1-XU110-130DC** 259458			
			220 V – 250 V DC	**NZM1-XU220-250DC** 259460			
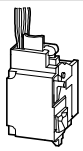							

	For use with	Rated control voltage U_S V	Part no. Article no. when ordered separately	Price see price list	Std. pack	Notes
Undervoltage releases						
Without auxiliary contact Non-delayed disconnection of LZM circuit-breakers when the control voltage sinks below 35 – 70% U_S. For use with Emergency-Stop devices in conjunction with Emergency-Stop button.						
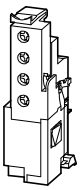 	LZM2(-4) LZM3(-4)	24 V 50/60 Hz	**NZM2/3-XU24AC** 259491		1 off	When the undervoltage release is de-energized, accidental contact with the main contacts of the switch during attempts to switch on, is safely prevented . Undervoltage release cannot be installed simultaneously with NZM...-XHIV... early-make auxiliary contact or NZM...-XA... shunt release.
		110 V – 130 V 50/60 Hz	**NZM2/3-XU110-130AC** 259497			
		208 V 240 V 50/60 Hz	**NZM2/3-XU208-240AC** 259499			
		380 V – 440 V 50/60 Hz	**NZM2/3-XU380-440AC** 259501			
		480 V – 525 V 50/60 Hz	**NZM2/3-XU480-525AC** 259503			
		600 V 50/60 Hz	**NZM2/3-XU600AC** 259505			
		12 V DC	**NZM2/3-XU12DC** 259507			
		24 V DC	**NZM2/3-XU24DC** 259509			
		110 V 130 V DC	**NZM2/3-XU110-130DC** 259515			
		220 V – 250 V DC	**NZM2/3-XU220-250DC** 259517			
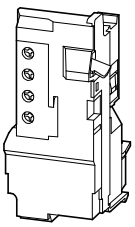 	LZM4(-4)	24 V 50/60 Hz	**NZM4-XU24AC** 266189		1 off	
		110 V – 130 V 50/60 Hz	**NZM4-XU110-130AC** 266192			
		208 V – 240 V 50/60 Hz	**NZM4-XU208-240AC** 266193			
		380 V – 440 V 50/60 Hz	**NZM4-XU380-440AC** 266194			
		480 V – 525 V 50/60 Hz	**NZM4-XU480-525AC** 266195			
		600 V 50/60 Hz	**NZM4-XU600AC** 266196			
		12 V DC	**NZM4-XU12DC** 266203			
		24 V DC	**NZM4-XU24DC** 266204			
		110 V – 130 V DC	**NZM4-XU110-130DC** 266207			
		220 V – 250 V DC	**NZM4-XU220-250DC** 266208			

	For use with	Rated control voltage U_s V	Part no. Article no. when ordered separately	Price see price list	Std. pack	Notes
Undervoltage releases						
With two early-make auxiliary contacts For interlocking and load-shedding circuits, as well as for early-make of the undervoltage release in main-switch applications.						
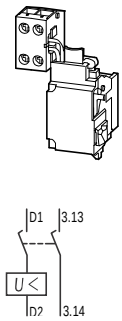	With clamp terminal on the left-hand switch side.	LZM1(-4)	24 V 50/60 Hz	**NZM1-XUHIV24AC** 259531		1 off	When the undervoltage release is de-energized, accidental contact with the main contacts of the switch during attempts to switch on is safely prevented. Early-make of the auxiliary contacts with on and off switching (manual operation): approx. 20 ms. Undervoltage releases cannot be installed simultaneously with NZM...-XHIV... early-make auxiliary contact or NZM...-XA... shunt release.
			110 V – 130 V 50/60 Hz	**NZM1-XUHIV110-130AC** 259537		
			208 V – 240 V 50/60 Hz	**NZM1-XUHIV208-240AC** 259539		
			380 V – 440 V 50/60 Hz	**NZM1-XUHIV380-440AC** 259541		
			480 V – 525 V 50/60 Hz	**NZM1-XUHIV480-525AC** 259543		
			12 V DC	**NZM1-XUHIV12DC** 259545		
			24 V DC	**NZM1-XUHIV24DC** 259547		
			110 V – 130 V DC	**NZM1-XUHIV110-130DC** 259553		
			220 V – 250 V DC	**NZM1-XUHIV220-250DC** 259555		
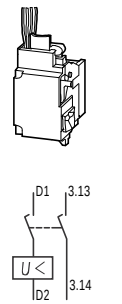						
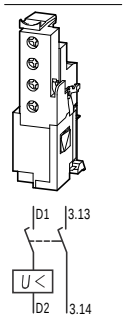		LZM2(-4) LZM3(-4)	24 V 50/60 Hz	**NZM2/3-XUHIV24AC** 259583		1 off	When the undervoltage release is de-energized, accidental contact with the main contacts of the switch during attempts to switch on is safely prevented. Early-make of the auxiliary contacts with on and off switching (manual operation): approx. 20 ms. Cannot be used in conjunction with NZM...-XR... remote operator. Undervoltage releases cannot be installed simultaneously with NZM...-XHIV... early-make auxiliary contact or NZM...-XA... shunt release.
			110 V – 130 V 50/60 Hz	**NZM2/3-XUHIV110-130AC** 259589		
			208 V – 240 V 50/60 Hz	**NZM2/3-XUHIV208-240AC** 259591		
			380 V – 440 V 50/60 Hz	**NZM2/3-XUHIV380-440AC** 259594		
			480 V – 525 V 50/60 Hz	**NZM2/3-XUHIV480-525AC** 259598		
			12 V DC	**NZM2/3-XUHIV12DC** 259600		
			24 V DC	**NZM2/3-XUHIV24DC** 259602		
			110 V – 130 V DC	**NZM2/3-XUHIV110-130DC** 259608		
			220 V – 250 V DC	**NZM2/3-XUHIV220-250DC** 259610		

	For use with	Rated control voltage U_s V	Part no. Article no. when ordered separately	Price see price list	Std. pack	Notes
Undervoltage releases						
With two early-make auxiliary contacts						
For interlocking and load-shedding circuits, as well as for early-make of the undervoltage release in main-switch applications.						
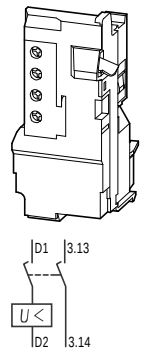	LZM4(-4)	24 V 50/60 Hz	**NZM4-XUHIV24AC** 266217		1 off	When the undervoltage release is de-energized, accidental contact with the main switches of the switch during attempts to switch on is safely prevented. Early-make of the auxiliary contacts with switch on (manual operation): approx. 90 ms. Cannot be used in conjunction with NZM...-XR... remote operator. Undervoltage releases cannot be installed simultaneously with NZM...-XHIV... early-make auxiliary contact or NZM...-XA... shunt release.
		110 V – 130 V 50/60 Hz	**NZM4-XUHIV110-130AC** 266220			
		208 V – 240 V 50/60 Hz	**NZM4-XUHIV208-240AC** 266221			
		380 V – 440 V 50/60 Hz	**NZM4-XUHIV380-440AC** 266222			
		480 V – 525 V 50/60 Hz	**NZM4-XUHIV480-525AC** 266223			
		12 V DC	**NZM4-XUHIV12DC** 266231			
		24 V DC	**NZM4-XUHIV24DC** 266232			
		110 V – 130 V DC	**NZM4-XUHIV110-130DC** 266235			
		220 V – 250 V DC	**NZM4-XUHIV220-250DC** 266236			

xEnergy **LZM1, LZM2/3..., LZM4** Moeller SK1230-1176GB http://catalog.moeller.net

	For use with	Rated control voltage U_s V	**Part no.** Article no. when ordered separately	**Price** see price list	Std. pack
Undervoltage releases					
With two separate early-make auxiliary contacts					
Coil connection wired to clamp terminal, auxiliary switch connections wired with 3 m loose connection cables					
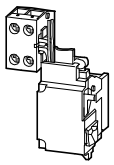 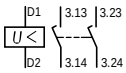	LZM1(-4)	24 V 50/60 Hz	**NZM1-XUHIV20KL24AC** 284388		1 off
		110 V – 130 V 50/60 Hz	**NZM1-XUHIV20KL110-130AC** 284389		
		208 V – 240 V 50/60 Hz	**NZM1-XUHIV20KL208-240AC** 284400		
		24 V DC	**NZM1-XUHIV20KL24DC** 284387		
Coil connection with 3 m loose connection cables, auxiliary switch connections wired to clamp terminal					
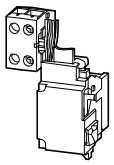 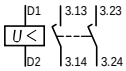	LZM1(-4)	24 V 50/60 Hz	**NZM1-XUHIV20LK24AC** 284402		1 off
		110 V – 130 V 50/60 Hz	**NZM1-XUHIV20LK110-130AC** 284403		
		208 V … 240 V 50/60 Hz	**NZM1-XUHIV20LK208-240AC** 284404		
		24 V DC	**NZM1-XUHIV20LK24DC** 284401		
Coil connection with 3 m loose connection cables, auxiliary switch connections wired to clamp terminal					
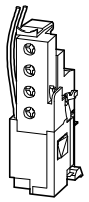 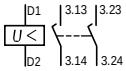	LZM2(-4) LZM3(-4)	24 V 50/60 Hz	**NZM2/3-XUHIV20LK24AC** 285291		1 off
		110 V – 130 V 50/60 Hz	**NZM2/3-XUHIV20LK110-130AC** 284407		
		208 V – 240 V 50/60 Hz	**NZM2/3-XUHIV20LK208-240AC** 284408		
		24 V DC	**NZM2/3-XUHIV20LK24DC** 284405		
Contacts 3.23 and 3.24 with separate 3 m connection cables.					
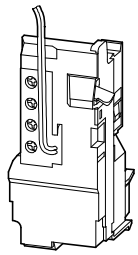 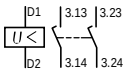	LZM4(-4)	24 V 50/60 Hz	**NZM4-XUHIV2024AC** 266244		1 off
		110 V – 130 V 50/60 Hz	**NZM4-XUHIV20110-130AC** 266247		
		208 V 240 V 50/60 Hz	**NZM4-XUHIV20208-240AC** 266248		
		380 V – 440 V 50/60 Hz	**NZM4-XUHIV20380-440AC** 266249		
		24 V DC	**NZM4-XUHIV2024DC** 266258		

Notes

When the undervoltage release is de-energized, accidental contact with the main switches of the switch during attempts to switch on is safely prevented.
Early-make of the auxiliary contacts with on and off switching (manual operation): approx. 20 ms.
Cannot be used in conjunction with NZM...-XR... remote operator.
Undervoltage releases cannot be installed simultaneously with NZM...-XHIV... early-make auxiliary contact or NZM...-XA... shunt release.

	For use with	Part no. Article no. when ordered separately	Price see price list	Std. pack	Notes
Undervoltage releases, off-delayed					
Combination of separate delay unit and special tripping device.					
Delay unit Voltage dips of less than the setting between 0.06 – 16 s do not cause disconnection of the NZM circuit-breaker or N switch-disconnector.					
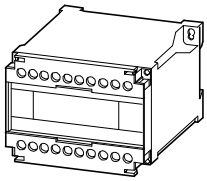	LZM1(-4), 2(-4), 3(-4), 4(-4) 50/60 Hz 220 V – 240 V 380 V – 440 V 480 V – 550 V DC/AC 24 V	**UVU-NZM** 260154		1 off	Adjustable delay time 70 ms – 4 s. With additional capacitor up to 16 s. A special tripping device is required. Cannot be installed simultaneously with NZM...-XHIV... or NZM...-XA... shunt release. Delay unit for separate installation (Fixing: top-hat rail or screws). For other operating voltages use control transformer.
Special tripping device For combination with separate delay unit					
Without auxiliary contacts					
NZM1-X… with 3 m separate connection cables instead of screw terminal, NZM2, 3 , 4 with screw terminal					
	LZM1(-4)	**NZM1-XUVL** 271607		1 off	UVU-NZM delay unit is additionally required. Cannot be installed simultaneously with separate NZM...-XHIV early-make auxiliary contact or NZM...-XA... shunt release.
	LZM2(-4) LZM3(-4)	**NZM2/3-XUV** 259527			
	LZM4(-4)	**NZM4-XUV** 266588			
With 2 early-make auxiliary contacts					
NZM1-X… with 3 m separate connection cables instead of screw terminal, NZM2, 3 , 4 with screw terminal					
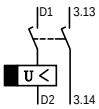	LZM1(-4)	**NZM1-XUVHIVL** 271608		1 off	Cannot be used in conjunction with NZM...-XR... remote operator. UVU-NZM delay unit is additionally required. Cannot be installed simultaneously with separate NZM...-XHIV early-make auxiliary contact or NZM...-XA... shunt release. LZM1, 2, 3: Early-make of the auxiliary contacts with on and off switching (manual operation): approx. 20 ms. LZM4: Early-make of the auxiliary contacts with switch on (manual operation): approx. 90 ms.
	LZM2(-4) LZM3(-4)	**NZM2/3-XUVHIV** 259684			
	LZM4(-4)	**NZM4-XUVHIV** 266596			
With 2 separately operating early-make auxiliary contacts					
NZM1-X… with 3 m separate connection cables instead of screw terminal, NZM2(3)(4)-X… with screw terminal, contact 3.23 and 3.24 with 3 m separate connection cables.					
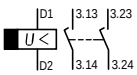	LZM1(-4)	**NZM1-XUVHIV20L** 271609		1 off	Cannot be used in conjunction with NZM...-XR... remote operator. UVU-NZM delay unit is additionally required. Cannot be installed simultaneously with separate NZM...-XHIV early-make auxiliary contact or NZM...-XA... shunt release. LZM1, 2, 3: Early-make of the auxiliary contacts with on and off switching (manual operation): approx. 20 ms. LZM4: Early-make of the auxiliary contacts with switch on (manual operation): approx. 90 ms.
	LZM2(-4) LZM3(-4)	**NZM2/3-XUVHIV20** 259688			
	LZM4(-4)	**NZM4-XUVHIV20** 266604			

		For use with	Rated control voltage U_s V	Part no. Article no. when ordered separately	Price see price list	Std. pack	Notes
Shunt releases							
Without auxiliary contact Switches are tripped by a voltage pulse or by the application of uninterrupted voltage.							
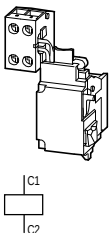	With clamp terminal on the left-hand switch side.	LZM1(-4)	12 V AC/DC	**NZM1-XA12AC/DC** 259706		1 off	When the undervoltage release is de-energized, accidental contact with the main contacts of the switch during attempts to switch on, is safely prevented. Shunt release cannot be installed simultaneously with NZM...-XHIV... early-make auxiliary contact or NZM...-XU... undervoltage release.
			24 V AC/DC	**NZM1-XA24AC/DC** 259708			
			110 V – 130 V AC/DC	**NZM1-XA110-130AC/DC** 259724			
			208 V – 250 V AC/DC	**NZM1-XA208-250AC/DC** 259726			
			380 V – 440 V AC/DC	**NZM1-XA380-440AC/DC** 259728			
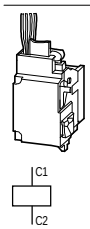							
Without auxiliary contact Switches are tripped by a voltage pulse or by the application of uninterrupted voltage.							
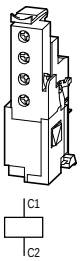		LZM2(-4) LZM3(-4)	12 V AC/DC	**NZM2/3-XA12AC/DC** 259752		1 off	When the undervoltage release is de-energized, accidental contact with the main contacts of the switch during attempts to switch on, is safely prevented. Shunt release cannot be installed simultaneously with NZM...-XHIV... early-make auxiliary contact or NZM...-XU... undervoltage release.
			24 V AC/DC	**NZM2/3-XA24AC/DC** 259754			
			110 V – 130 V AC/DC	**NZM2/3-XA110-130AC/DC** 259760			
			208 V – 250 V AC/DC	**NZM2/3-XA208-250AC/DC** 259763			
			380 V – 440 V AC/DC	**NZM2/3-XA380-440AC/DC** 259766			
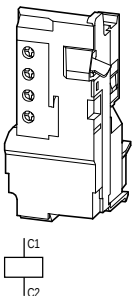		LZM4(-4)	12 V AC/DC	**NZM4-XA12AC/DC** 266446		1 off	
			24 V AC/DC	**NZM4-XA24AC/DC** 266447			
			110 V – 130 V AC/DC	**NZM4-XA110-130AC/DC** 266450			
			208 V – 250 V AC/DC	**NZM4-XA208-250AC/DC** 266451			
			380 V – 440 V AC/DC	**NZM4-XA380-440AC/DC** 266452			

	For use with	Part no. Article no. when ordered separately	Price see price list	Std. pack	Notes
Shunt releases					
Capacitor unit 230 V 50/60 Hz in conjunction with NZM...-XA2082-50AC/DC shunt release Enclosure: degree of protection IP20					
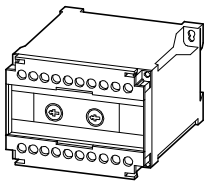	LZM1(-4) LZM2(-4) LZM3(-4) LZM4(-4)	**NZM-XCM** 229413		1 off	nables the safe use of circuit-breakers as mesh network circuit-breakers in the range from 0 … 110 % U_n with constant switch-off time of 40 ms. If the mains voltage is absent, the installed capacitor supplies power for actuating the shunt release for at least 12 hours. The configuration of the capacitor unit is undertaken independently of the circuit-breaker. Connect NZM-XCM to the power feed side. Design note: Connect a standard auxiliary contact as N/O in series with the shunt release! Standard auxiliary contact not included as standard.

		For use with	Rated control voltage U_s V	Part no. Article no. when ordered separately	Price see price list	Std. pack	Notes
Shunt releases							
Without auxiliary contacts For mesh-network circuit-breakers For intermittent operation Maximum on time = 1 s Operating range 10 – 110 % U_s							
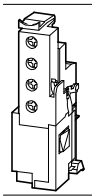		LZM3(-4)	230 V AC	**NZM3-XA-230AC-MNS** 274097		1 off	Cannot be installed simultaneously with NZM...-XHIV... early-make auxiliary contact or NZM...-XU... undervoltage release. Intermittent operation guaranteed by series connection of an M22-(C)K10 make contact. The maximum operating time of the shunt release for mesh network circuit-breaker is 1 s.
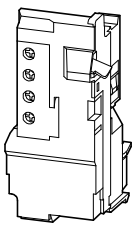		LZM4(-4)	230 V AC	**NZM4-XA-230AC-MNS** 274138		1 off	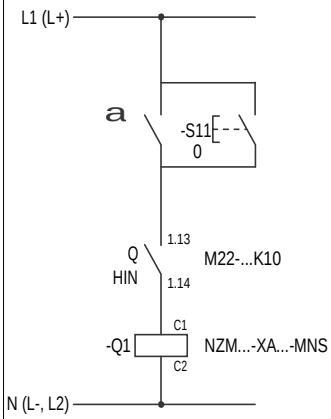

a	Reverse-power relay contact
-S11	Remote off
Q	Standard auxiliary contact
-Q1	Shunt release

		For use with	Rated control voltage U_s V	Part no. Article no. when ordered separately	Price see price list	Std. pack	Notes
Shunt releases							
With early-make auxiliary contact Not in combination with remote operator.							
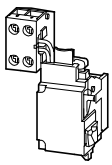	With clamp terminal on the left-hand switch side.	LZM1(-4)	12 V AC/DC	**NZM1-XAHIV12AC/DC** 259772		1 off	When the shunt release is energized, accidental contact with the main contacts of the switch during attempts to switch on is safely prevented. Early-make of the auxiliary contact with on and off switching (manual operation): approx. 20 ms. Shunt release cannot be installed simultaneously with NZM...-XHIV.. early-make auxiliary contact or NZM...-XU... undervoltage release.
			24 V AC/DC	**NZM1-XAHIV24AC/DC** 259774			
			110 V – 130 V AC/DC	**NZM1-XAHIV110-130AC/DC** 259780			
			208 V – 250 V AC/DC	**NZM1-XAHIV208-250AC/DC** 259782			
			380 V – 440 V AC/DC	**NZM1-XAHIV380-440AC/DC** 259784			
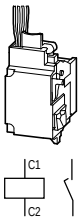							
With early-make auxiliary contact							
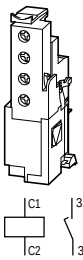		LZM2(-4) LZM3(-4)	12 V AC/DC	**NZM2/3-XAHIV12AC/DC** 259808		1 off	When the shunt release is energized, accidental contact with the main contacts of the switch during attempts to switch on is safely prevented. Early-make of the auxiliary contact with on and off switching (manual operation): approx. 20 ms. Cannot be used in conjunction with NZM...-XR... remote operator. Shunt release cannot be installed simultaneously with NZM...-XHIV.. early-make auxiliary contact or NZM...-XU... undervoltage release.
			24 V AC/DC	**NZM2/3-XAHIV24AC/DC** 259810			
			110 V – 130 V AC/DC	**NZM2/3-XAHIV110-130AC/DC** 259816			
			208 V – 250 V AC/DC	**NZM2/3-XAHIV208-250AC/DC** 259818			
			380 V – 440 V AC/DC	**NZM2/3-XAHIV380-440AC/DC** 259820			
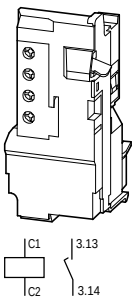		LZM4(-4)	12 V AC/DC	**NZM4-XAHIV12AC/DC** 266470		1 off	
			24 V AC/DC	**NZM4-XAHIV24AC/DC** 266471			
			110 V – 130 V AC/DC	**NZM4-XAHIV110-130AC/DC** 266474			
			208 V – 250 V AC/DC	**NZM4-XAHIV208-250AC/DC** 266475			
			380 V – 440 V AC/DC	**NZM4-XAHIV380-440AC/DC** 266476			

			For use with	Rated control voltage U_s V	Part no. Article no. when ordered separately	Price see price list	Std. pack
Shunt releases							
For mesh-network circuit-breakers For intermittent operation Maximum on time = 1 s Operating range 10 – 110 % U_s							
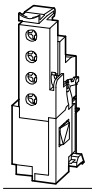	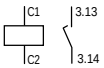	With early-make auxiliary contact	LZM3(-4)	230 V AC	**NZM3-XAHIV-230AC-MNS** 274141		1 off
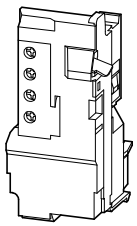	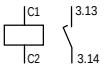			230 V AC	**NZM4-XAHIV-230AC-MNS** 274143		1 off

Notes

Cannot be installed simultaneously with NZM...-XHIV... early-make auxiliary contact or NZM...-XU... undervoltage release.
Cannot be used in conjunction with NZM...-XR... remote operator.

Intermittent operation guaranteed by series connection of a N/O contact M22-(C)K10 (standard auxiliary contact).
The maximum operating time of the shunt release for mesh network circuit-breaker is 1 s.
LZM3: Early-make of the auxiliary contact with on and off switching (manual operation): approx. 20 ms.
LZM4: Early-make of the auxiliary contact with switch on (manual operation): approx. 90 ms.

	For use with	Part no. Article no.	Price see price list	Std. pack	Notes
Door coupling rotary handle					
Complete including rotary drive and coupling parts An additional extension shaft is necessary with the NZM...-XT(V)D(V)(R)(-60) types. Degree of protection IP66					
Standard, black/grey					
Lockable on the 0 position on the handle using up to 3 padlocks. With door interlock	LZM1(-4)	**NZM1-XTVD** 260166		1 off	Door interlock • Not defeated in the locked OFF and ON positions • Can be modified such that it can be defeated from the outside using a screwdriver, when it is in the unlocked ON position. • Door can be opened in OFF NZM...-XTVD(V) • External warning plate/ designation label can be clipped on
	LZM2(-4)	**NZM2-XTVD** 260168			
	LZM3(-4)	**NZM3-XTVD** 260170			
	LZM4(-4)	**NZM4-XTVD** 266614			
Lockable on the handle on the switch using up to 3 padlocks. Can be locked in 0 position on the handle, with adequate modification also in I position. With door interlock. Lockable in the 0 position	LZM1(-4)	**NZM1-XTVDV** 260172			
	LZM2(-4)	**NZM2-XTVDV** 260174			
	LZM3(-4)	**NZM3-XTVDV** 260176			
	LZM4(-4)	**NZM4-XTVDV** 266616			
Red-yellow for Emergency-Stop					
Lockable on the handle on the switch using up to 3 padlocks. Lockable in 0 position on handle. With door interlock. Lockable in the 0 position	LZM1(-4)	**NZM1-XTVDVR** 260178		1 off	Door interlock • Not defeatable in the locked OFF position. • Can be modified such that it can be defeated from the outside using a screwdriver, when it is in the unlocked ON position. • Door can be opened in OFF NZM...-XTVDVR • External warning plate/ designation label can be clipped on
	LZM2(-4)	**NZM2-XTVDVR** 260180			
	LZM3(-4)	**NZM3-XTVDVR** 260182			
	LZM4(-4)	**NZM4-XTVDVR** 266618			
Extension shaft					
Max. mounting depth: 400 mm	LZM1(-4) LZM2(-4)	**NZM1/2-XV4** 261232		1 off	Can be cut to required length
	LZM3(-4) LZM4(-4)	**NZM3/4-XV4** 261234			
Max. mounting depth: 600 mm	LZM1(-4) LZM2(-4)	**NZM1/2-XV6** 260191			
	LZM3(-4) LZM4(-4)	**NZM3/4-XV6** 260193			

Notes Circuit-breaker can also be installed in a lying position 90 ° left/right, with the handle still in the same position.

For a max. shaft length of 60 mm Part no. Article no.	Price see price list	Std. pack	Notes	Extremely narrow fittings Part no. Article no.	Price see price list	Std. pack	Notes
NZM1-XTVD-60 271504		1 off	Door interlock • Not defeated in the locked OFF and ON positions • Can be modified such that it can be defeated from the outside using a screwdriver, when it is in the unlocked ON position. • Door can be opened in OFF NZM...-XTVD(V)-60 • For maximum shaft length 60 mm • Without shaft support • Cannot be combined with NZM...-XDZ additional handle • External warning plate/ designation label can be clipped on	**NZM1-XTVD-0** 279392		1 off	Door interlock • Not defeated in the locked OFF and ON positions • Can be modified such that it can be defeated from the outside using a screwdriver, when it is in the unlocked ON position. • Door can be opened in OFF NZM...-XTVD(V)-0 • For extremely narrow fittings • With special short extension shaft • Cannot be combined with NZM...-XDZ additional handle • External warning plate/ designation label can be clipped on
NZM2-XTVD-60 271505				**NZM2-XTVD-0** 279393			
NZM3-XTVD-60 271506				**NZM3-XTVD-0** 279394			
NZM4-XTVD-60 271507				**NZM4-XTVD-0** 279395			
NZM1-XTVDV-60 271508				**NZM1-XTVDV-0** 279396			
NZM2-XTVDV-60 271509				**NZM2-XTVDV-0** 279397			
NZM3-XTVDV-60 271510				**NZM3-XTVDV-0** 279398			
NZM4-XTVDV-60 271511				**NZM4-XTVDV-0** 279399			
NZM1-XTVDVR-60 271512		1 off	Door interlock • Not defeatable in the locked OFF position. • Can be modified such that it can be defeated from the outside using a screwdriver, when it is in the unlocked ON position. • Door can be opened in OFF NZM...-XTVDVR-60 • For maximum shaft length 60 mm • Without shaft support • Cannot be combined with NZM...-XDZ additional handle • External warning plate/ designation label can be clipped on	**NZM1-XTVDVR-0** 279400		1 off	Door interlock • Not defeatable in the locked OFF position. • Can be modified such that it can be defeated from the outside using a screwdriver, when it is in the unlocked ON position. • Door can be opened in OFF NZM...-XTVDVR-0 • For extremely narrow fittings • With special short extension shaft • Cannot be combined with NZM...-XDZ additional handle • External warning plate/ designation label can be clipped on
NZM2-XTVDVR-60 271513				**NZM2-XTVDVR-0** 279401			
NZM3-XTVDVR-60 271514				**NZM3-XTVDVR-0** 279402			
NZM4-XTVDVR-60 271515				**NZM4-XTVDVR-0** 279403			

		For use with	Part no. Article no. when ordered separately	Price see price list	Std. pack	Notes
Rotary handle on circuit-breaker						
Complete with rotary drive						
Standard, black/grey						
	Lockable on the 0 position on the switch using up to 3 padlocks.	LZM1(-4)	**NZM1-XDV** 260125		1 off	NZM1(2)(3)-X...: Can also be combined with insulating surround. MODAN handle position detection by wire release can be retrofitted.
		LZM2(-4)	**NZM2-XDV** 260127			
		LZM3(-4)	**NZM3-XDV** 260129			
		LZM4(-4)	**NZM4-XDV** 266608			
	Lockable on the 0 position on the handle using up to 3 padlocks.	LZM1(-4)	**NZM1-XDVG** 285247		1 off	Can also be combined with insulating surround.
		LZM2(-4)	**NZM2-XDVG** 285248			
Red-yellow for Emergency-Stop						
	Lockable on the 0 position on the switch using up to 3 padlocks.	LZM1(-4)	**NZM1-XDVR** 260135		1 off	NZM1(2)(3)-X...: Can also be combined with insulating surround. MODAN handle position detection by wire release can be retrofitted.
		LZM2(-4)	**NZM2-XDVR** 260137			
		LZM3(-4)	**NZM3-XDVR** 260140			
		LZM4(-4)	**NZM4-XDVR** 266610			
	Lockable on the 0 position on the handle using up to 3 padlocks.	LZM1(-4)	**NZM1-XDVGR** 285249			Can also be combined with insulating surround.
		LZM2(-4)	**NZM2-XDVGR** 285280			

Notes Circuit-breaker can also be installed in a lying position 90 ° left/right, with the handle still in the same position.

		For use with	Part no. Article no. when ordered separately	Price see price list	Std. pack	Notes
Rotary handle on switch with door interlock						
Complete with rotary drive and insulating surround						
Standard, black/grey						
	Lockable on the 0 position on the handle using up to 3 padlocks, can also be modified for the I position. Also available with door interlock e.g. for MCC service distribution.	LZM1(-4)	**NZM1-XDTV** 260131		1 off	Door interlock • In the ON position, can be defeated from the outside using a 1 mm pin • Not defeated in the locked OFF and ON positions • Door can be opened in OFF • Can only be switched ON when the door is closed
		LZM2(-4)	**NZM2-XDTV** 260133			
Red-yellow for Emergency-Stop						
	Lockable on the 0 position on the handle using up to 3 padlocks.	LZM1(-4)	**NZM1-XDTVR** 260142		1 off	
	Also available with door interlock e.g. for MCC service distribution	LZM2(-4)	**NZM2-XDTVR** 260144			

Notes Circuit-breaker can also be installed in a lying position 90 ° left/right, with the handle still in the same position.

	Type	For use with	Part no. Article no. when ordered separately	Price see price list	Std. pack
Main switch assembly kit					
Equipment supplied: • Rotary door-coupling handle • NZM...-XV4 extension shaft • External warning plate/designation label in German/English • Black and yellow flash For enhanced protection against direct contact on the incomer side, IP2X protection against contact with a finger can be ordered a 23 Other external warning plates/designation labels can be clipped on.					
With black door coupling rotary handle					
Lockable on the 0 position on the handle using up to 3 padlocks, can also be modified for the I position. With door interlock.		LZM1(-4)	**NZM1-XHB** 266626		1 off
		LZM2(-4)	**NZM2-XHB** 266627		
		LZM3(-4)	**NZM3-XHB** 266628		
		LZM4(-4)	**NZM4-XHB** 271779		
With red door coupling rotary handle for using switch as Emergency-Stop device according to IEC/EN 602041					
Lockable on the 0 position on the handle using up to 3 padlocks. Lockable door as additional feature, locking facility on circuit-breaker in 0 position.		LZM1(-4)	**NZM1-XHBR** 266632		
		LZM2(-4)	**NZM2-XHBR** 266633		
		LZM3(-4)	**NZM3-XHBR** 266634		
		LZM4(-4)	**NZM4-XHBR** 271842		
Main switch assembly kit for side panel mounting					
Actuation of the switch on the control panel side wall **Switch mounting on mounting plate** Equipment supplied: • Door coupling rotary handle • NZM...-XV4 extension shaft • External warning plate/designation label in German/English • Black and yellow flash For enhanced protection against direct contact on the incomer side, IP2X protection against contact with a finger can be ordered a 23 Other external warning plates/designation labels can be clipped on.					
Standard, black/grey					
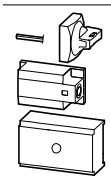 Lockable on the 0 position on the handle using up to 3 padlocks, can also be modified for the I position.	For operation on the left	LZM1(-4)	**NZM1-XS-L** 266641		1 off
		LZM2(-4)	**NZM2-XS-L** 266642		
		LZM3(-4)	**NZM3-XS-L** 266643		
		LZM4(-4)	**NZM4-XS-L** 289806		
	For operation on the right	LZM1(-4)	**NZM1-XS-R** 266644		
		LZM2(-4)	**NZM2-XS-R** 266645		
		LZM3(-4)	**NZM3-XS-R** 266646		
		LZM4(-4)	**NZM4-XS-R** 289807		
Red-yellow for Emergency-Stop					
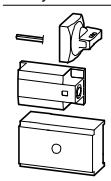 Lockable on the 0 position on the handle using up to 3 padlocks.	For operation on the left	LZM1(-4)	**NZM1-XSR-L** 266653		
		LZM2(-4)	**NZM2-XSR-L** 266654		
		LZM3(-4)	**NZM3-XSR-L** 266655		
		LZM4(-4)	**NZM4-XSR-L** 289808		
	For operation on the right	LZM1(-4)	**NZM1-XSR-R** 266656		
		LZM2(-4)	**NZM2-XSR-R** 266657		
		LZM3(-4)	**NZM3-XSR-R** 266658		
		LZM4(-4)	**NZM4-XSR-R** 289809		

		Type	For use with	Part no. Article no. when ordered separately	Price see price list	Std. pack
Main switch assembly kit for side panel mounting with mounting bracket						
For direct mounting of circuit-breaker and handle in the side wall of the control cabinet Equipment supplied: • Door coupling rotary handle • Mounting bracket • Special short extension shaft • External warning plate/designation label in German/English • Black and yellow flash For enhanced protection against direct contact on the incomer side, IP2X protection against contact with a finger can be ordered a 23 Other external warning plates/designation labels can also be clipped on.						
Standard, black/grey						
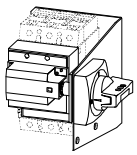	Can be locked in 0 position, with adequate modification also in I position. Narrowest minimum clearance between enclosure side plates of control panel and circuit-breaker is defined by mounting bracket. Extensions cannot be used.	For operation on the left	LZM1(-4)	**NZM1-XSM-L** 266663		1 off
		For operation on the left	LZM2(-4)	**NZM2-XSM-L** 266664		
		For operation on the right	LZM1(-4)	**NZM1-XSM-R** 266665		
		For operation on the right	LZM2(-4)	**NZM2-XSM-R** 266666		
Red-yellow for Emergency-Stop						
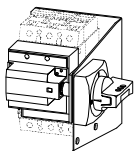	Lockable in 0 position on handle. Narrowest minimum clearance between enclosure side plates of control panel and circuit-breaker is defined by mounting bracket. Extensions cannot be used.	For operation on the left	LZM1(-4)	**NZM1-XSRM-L** 266671		1 off
		For operation on the left	LZM2(-4)	**NZM2-XSRM-L** 266672		
		For operation on the right	LZM1(-4)	**NZM1-XSRM-R** 266673		
		For operation on the right	LZM2(-4)	**NZM2-XSRM-R** 266674		
Add-on plate						
For fitting to the mounting bracket when using N conductor or PE conductor terminals K25, K50, K95 or K150.						
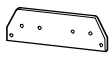			LZM1(-4) LZM2(-4)	**NZM1/2-XZB** 266676		1 off

Additional terminal arrangement for side wall operator with mounting bracket
NZM1-XS(R)M-…, NZM2-XS(R)M-…
Additional terminals K25, K50, K95, K150 a 66

Actuation:

3 pole

For operation on the right

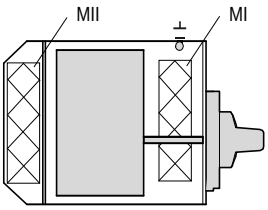

For operation on the left

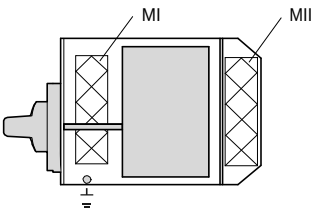

4 pole

For operation on the right

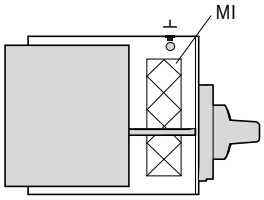

For operation on the left

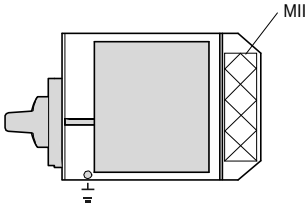

Mounting areas		MI				MII	
Variation options		V1	V2	V3	V4	V1	V2
Maximum number of additional terminals	K25	2 x	–	–	–	–	–
	K50	–	2 x	–	–	–	–
	K95	–	–	1 x	–	1 x	–
	K150	–	–	–	1 x	–	1 x

Example: In mounting area MI, variation option 1 allows the K25 additional terminal to be mounted twice.

	For use with	Part no. Article no. when ordered separately	Price see price list	Std. pack	Notes
Rear drive For direct rear connection of the switch to the side of the control panel or control panel door. Switch actuation on rear through side plate or control panel door. For switch with toggle lever. For enhanced protection against direct contact on the incomer side, IP2X protection against contact with a finger can be ordered a 21 Degree of protection IP66, UL/CSA Type 4X					
Standard, black/grey					
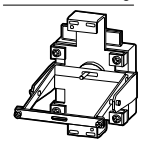 Lockable on the 0 position on the handle using up to 3 padlocks.	LZM1	**NZM1-XRAV** 107245		1 off	External warning plate can be clipped on
	LZM2	**NZM2-XRAV** 107247			
Red-yellow for Emergency-Stop					
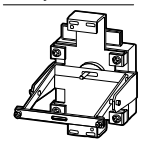 Lockable on the 0 position on the handle using up to 3 padlocks.	LZM1	**NZM1-XRAVR** 107249		1 off	
	LZM2	**NZM2-XRAVR** 107261			
External warning plate/designtion label 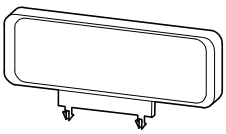					
German/English	LZM1(-4) LZM2(-4) LZM3(-4) LZM4(-4)	**ZFS61/62-NZM7** 272525		1 off	A bilingual external warning plate/ designation label in German/English is already included in the main switch assembly kit.
German		**ZFS61-NZM7** 051089			
English		**ZFS62-NZM7** 065957			
French		**ZFS63-NZM7** 065958			
Blank (for engraving or printing)		**ZFS60-NZM7** 065896			
Further languages		**ZFS*-NZM7** 999978			External warning plates are available in the following languages: 64 Bulgarian, 65 Danish, 66 Finnish, 67 Dutch, 68 Italian, 69 Greek, 70 Norwegian, 71 Polish, 72 Portuguese, 73 Romanian, 74 Russian, 75 Swedish, 76 Serbo-Croatian, 77 Spanish, 78 Czech, 79 Turkish, 80 Hungarian, 81 Afrikaans To obtain the order number, insert the language code number into the type reference required. Ordering example External warning plate in Finnish: ZFS**66**-NZM7
Lightning symbol Including terminal marking for main switch					
Small	LZM1(-4) LZM2(-4)	**BPF-NZM7** 217294		10 off	Included as standard in main switch assembly kit
Large 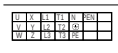	LZM3(-4) LZM4(-4)	**BPF-NZM10** 231363		10 off	

	For use with	Part no. Article no. when ordered separately	Price see price list	Std. pack	Notes
Add-on handle					
Enables switching when the control panel door is open					
	LZM1(-4) LZM2(-4)	**NZM1/2-XDZ** 266621		1 off	Push-fits on to the extension shaft 100 mm free extension shaft required. Cannot be combined with NZM...-XT...-60 door coupling rotary handles as well as NZM...-XT...-0.
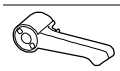	LZM3(-4) LZM4(-4)	**NZM3/4-XDZ** 266622		1 off	
Insulating surrounds					
For toggle lever, rotary handle with rotary drive and remote operator. Degree of protection IP40					
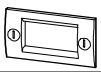	LZM1(-4)	**NZM1-XBR** 260195		1 off	For oblong cut-out on doors and enclosures with material thicknesses of 1.5 – 5 mm. External warning plate/designation label can be clipped on NZM4-XBR cannot be combined with rotary handle with rotary drive.
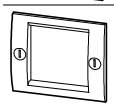	LZM2(-4)	**NZM2-XBR** 260197			
	LZM3(-4)	**NZM3-XBR** 284645			
	LZM4(-4)	**NZM4-XBR** 284646			
Toggle lever locking device					
Off position lockable using up to 3 padlocks (hasp thickness 4 – 8 mm)					
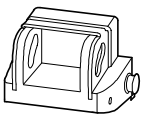	LZM1(-4)	**NZM1-XKAV** 260199		1 off	Cannot be combined with insulating surround.
	LZM2(-4) LZM3(-4)	**NZM2/3-XKAV** 260201		1 off	
Spacers					
Enables fast and low-priced adjustment of differing frame sizes with/without rotary handle to the same front depth					
	LZM1(-4) LZM2(-4)	**NZM1/2-XAB** 260203		1 set	Grid depth 17.5 mm, M4 thread Type contains 4 off spacer Maximum component capacity: LZM1: 4 units per fixing screw, LZM2: 2 units per fixing screw 2 (LZM1) or 4 (LZM2) fixing screws contained per circuit-breaker
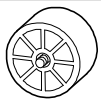	LZM3(-4) LZM4(-4)	**NZM3-XAB** 260211		1 set	Grid depth 17.5 mm, M5 thread One set contains 4 spacers LZM3, LZM4: 1 off per fixing screw 4 fixing screws per switch included
Clip plate					
Enables snap-fit of the circuit-breaker to a DIN rail					
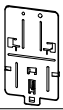	LZM1(-4)	**NZM1-XC35** 260213		1 off	For top-hat rail 35 mm
	LZM2	**NZM2-XC75** 260215		1 off	For top-hat rail 75 mm Not suitable for circuit-breakers with remote operator.

	For use with	Part no. Article no. when ordered separately	Price see price list	Std. pack	Notes
Mechanical interlocking of (door coupling) rotary handles					
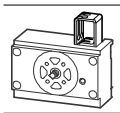	LZM1(-4)	**NZM1-XMV** 281581		1 off	Rotary handles on switches or door coupling rotary handles are additionally required. Cannot be combined with paralleling mechanisms, side wall operators and remote operator as well as NZM4-XBR insulating surrounds. In order to establish a mechanical interlock at least 2 interlock modules are required. Possible combinations and interlock variants ⓐ engineering Order Bowden cable separately
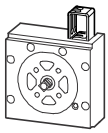	LZM2(-4)	**NZM2-XMV** 281582			
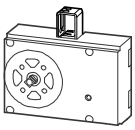	LZM3(-4)	**NZM3-XMV** 281583			
	LZM4(-4)	**NZM4-XMV** 281584			
Bowden cables					
For mechanical interlocking of (door coupling) rotary handles					
	LZM1(-4) LZM2(-4) LZM3(-4) LZM4(-4)	**NZM-XBZ225** 281585		1 off	
		NZM-XBZ600 281586			
		NZM-XBZ1000 281587			
Mechanical interlock for remote operator					
For 2 switches of the same or next frame size with each other. Mounting beside one another.					
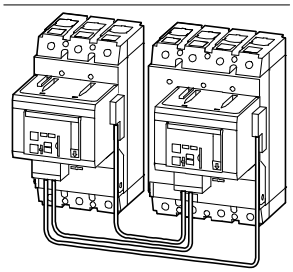	LZM2(-4) +LZM2(-4)	**NZM2-XMVR** 104543		1 off	Type contains parts for both switches. Remote operator also required. Maximum switching distance ⓐ engineering Cannot be combined with rotary handles, door coupling rotary handles and early-make auxiliary contacts.
	LZM2(-4) +LZM3(-4)	**NZM2/3-XMVR** 104544			
	LZM3(-4) +LZM3(-4)	**NZM3-XMVR** 104545			
	LZM3(-4) +LZM4(-4)	**NZM3/4-XMVR** 104546			
	LZM4(-4) +LZM4(-4)	**NZM4-XMVR** 104547			
For 2 switches of the same or different type with opposed operation. Extra long Bowden cable for mounting one above the other or in adjacent enclosures.					
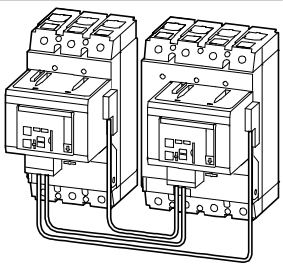	LZM2(-4) +LZM2(-4)	**NZM2-XMVRL** 104548		1 off	Type contains parts for both switches. Remote operator also required. Maximum switching distance ⓐ engineering Cannot be combined with rotary handles, door coupling rotary handles and early-make auxiliary contacts.
	LZM2(-4) +LZM3(-4)	**NZM2/3-XMVRL** 104549			
	LZM3(-4) +LZM3(-4)	**NZM3-XMVRL** 104550			
	LZM3(-4) +LZM4(-4)	**NZM3/4-XMVRL** 104551			
	LZM4(-4) +LZM4(-4)	**NZM4-XMVRL** 104552			

	For use with	Rated current I_e A	Part no. Article no. when ordered separately	Price see price list	Std. pack	Notes
Component adapter for circuit-breakers and switch-disconnectors for 60 mm busbar system For installation on flat copper busbars 12 … 30 x 5 … 10, double T and triple T profile Rated operational voltage U_e: 690 V • Halogen free • Temperature resistant to 120 °C • Self-extinguishing to UL 94 • Approved for feeder branch circuits to UL508A up to 600 V • 3 pole						
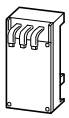	LZM1	160	**NZM1-XAD160** 104554		1 off	For breakers with box terminal as standard connection Connection to system at top using the supplied connection cable In conjunction with IP2X protection against contact with a finger Enhancement of the protection against direct contact on the switch outgoer side possible
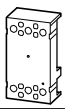	LZM2	250	**NZM2-XAD250** 104555			Connection to the system possible at top or bottom via connection on rear (+)NZM2-XKR4… Mounting using clamp and screw fixing.
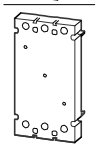	LZM3	550	**NZM3-XAD550** 104556			Connection to the system possible at top via connection on rear (+)NZM3-XK13… Mounting using clamp and screw fixing.

	For use with	Rated current I_e A	Part no. suffix Article no. when ordered with basic unit	Price see price list	Part no. Article no. when ordered separately	Price see price list	Std. pack
Connection on rear for component adapters For component adapters for LZM2, LZM3							
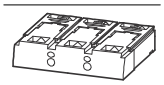	LZM2	250	**+NZM2-XKR4O** 281664		**NZM2-XKR4** 281666		1 off
	LZM2	250	**+NZM2-XKR4U** 281665		**NZM3-XKR13** 281668		
	LZM3	550	**+NZM3-XKR13O** 281667				

Notes Part no. and part no. suffix include parts for one switch side at top or bottom (with LZM3 top only). Required with component adapter and switch with connection on rear, see for example component adapter 104555 and 104556.
O = for fitting at the top
U = for fitting at the bottom

	For use with	Rated control voltage U_s V	Part no. Article no, when ordered separately	Price see price list	Std. pack
Remote operator					
For remote switching of circuit-breakers and switch-disconnectors. ON and OFF switching and resetting by means of 2-wire or 3-wire control. Can be synchronized. Local switching by hand possible Lockable in the 0 position of the remote operator with up to 3 padlocks (hasp thickness: 4 – 8 mm)					
	LZM2(-4)	110 – 130 V 50/60 Hz	**NZM2-XR110-130AC** 259830		1 off
		208 – 240 V 50/60 Hz	**NZM2-XR208-240AC** 259832		
		380 – 440 V 50/60 Hz	**NZM2-XR380-440AC**[1)] 259834		
		24 – 30 V DC	**NZM2-XR24-30DC** 259836		
		110 – 130 V DC	**NZM2-XR110-130DC** 259840		
		220 – 250 V DC	**NZM2-XR220-250DC** 259842		
	LZM3(-4)	110 – 130 V 50/60 Hz	**NZM3-XR110-130AC** 259848		
		208 – 240 V 50/60 Hz	**NZM3-XR208-240AC** 259850		
		380 – 440 V 50/60 Hz	**NZM3-XR380-440AC**[1)] 259852		
		24 – 30 V DC	**NZM3-XR24-30DC** 259854		
		110 – 130 V DC	**NZM3-XR110-130DC** 259858		
		220 – 250 V DC	**NZM3-XR220-250DC** 259860		
	LZM4(-4)	110 – 130 V 50/60 Hz	**NZM4-XR110-130AC** 266684		
		208 – 240 V 50/60 Hz	**NZM4-XR208-240AC** 266685		
		380 – 440 V 50/60 Hz	**NZM4-XR380-440AC**[1)] 266686		
		24 – 30 V DC	**NZM4-XR24-30DC** 266691		
		110 – 130 V DC	**NZM4-XR110-130DC** 266693		
		220 – 250 V DC	**NZM4-XR220-250DC** 266694		
Shroud for 4th pole Additional shroud for mounting the NZM2-XR... and NZM3-XR... on a 4-pole switch.					
	LZM2-4		**NZM2-XAVPR** 266677		1 off
	LZM3-4		**NZM3-XAVPR** 266678		1 off
Clamp terminal springloaded clamp Control circuit terminal springloaded terminals					
	NZM...-XR...		**NZM-XRC** 266696		1 off
Protective cover for door cutout Transparent protective shroud to increase the degree of protection to IP54					
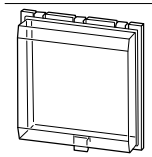	–		**RTR-NZM10** 034825		1 off

Notes

A standard auxiliary contact (HIN) for the switch position detection is supplied.
When installing the NZM2-XR… and NZM3-XR… remote operators on 4 pole switches, an additional 4 pole NZM2-XAVPR or NZM3-XAVPR shroud is necessary.

3-wire control

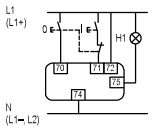

Terminal 70/71:
Please note during engineering:
Full current flows though the contact during make and break!
RMQ series contact elements can be used for the NZM2(3,4)-XR… remote operators.

2-wire control

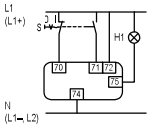

Terminal 75:
Operational readiness signal when the cover is closed, and not locked.
AC-15: 400 V; 2 A
DC-13: 220 V; 0.2 A

Three-wire control with automatic reset to the 0 position after the switch has tripped

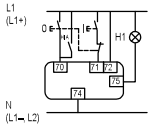

Switching cycle:

NZM2-XR

NZM3-XR

NZM4-XR

The time interval between OFF and ON is 3 seconds.
On commands received during the time interval are ignored within the first 3 seconds after switch off.

Electrical remote switching and manual tripping (push to trip) are still possible.

		Max. rated uninterrupted current I_u A	For use with	Part no. Article no. when ordered separately	Price see price list	Std. pack
Insulated enclosures						
With door coupling rotary handle Complete incl. all necessary functional parts Degree of protection IP65 not UL/CSA approved						
Standard, black/grey						
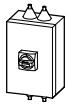	Lockable on the 0 position on the handle using up to 3 padlocks. Additionally with cover interlock.	F 63 A	NZM1	**NZM1-XCI23-TVD** 271522		1 off
		F 125 A	NZM1(-4)	**NZM1-XCI43-TVD** 271523		
		F 160 A	NZM1(-4)	**NZM1-XCI43/2-TVD** 104645		
		F 200 A	NZM2(-4)	**NZM2-XCI43-TVD** 271524		
		F 250 A	NZM2(-4)	**NZM2-XCI45-TVD** 280418		
		F 400 A	NZM3(-4)	**NZM3-XCI48-TVD** 271525		
Red-yellow for Emergency-Stop						
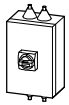	Lockable on the handle and on the switch using up to 3 padlocks each. Lockable in 0 position on handle. Cover interlock as additional feature, locking facility on circuit-breaker in 0 position.	F 63 A	NZM1	**NZM1-XCI23-TVDVR** 271527		1 off
		F 125 A	NZM1(-4)	**NZM1-XCI43-TVDVR** 271528		
		F 160 A	NZM1(-4)	**NZM1-XCI43/2-TVDVR** 104646		
		F 200 A	NZM2(-4)	**NZM2-XCI43-TVDVR** 271529		
		F 250 A	NZM2(-4)	**NZM2-XCI45-TVDVR** 279356		
		F 400 A	NZM3(-4)	**NZM3-XCI48-TVDVR** 271530		

	Rated uninterrupted current I_u A	Terminal capacities mm²	Part no. Article no. when ordered separately	Price see price list	Std. pack
Additional insulated terminals					
For looping through the neutral and protective conductor 1-pole					
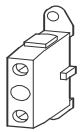	32	Flexible, 1 x (1.5 – 6)	**K10/1** 093827		10 off
	63	Flexible, 1 x (6 – 16), stranded, 1 x (16 – 25)	**K25/1** 096200		
	100	Flexible, 1 x (10 – 35), stranded, 1 x (16 – 50)	**K50/1** 098573		
	160	Stranded, 1 x (16 – 95)	**K95/1N/BR** 012336		1 off
	250	Stranded, 1 x (35 – 150), 2 x (16 – 70)	**K150/1/BR** 014709		
	400	Stranded, 1 x (50 – 240), 2 x (25 – 120)	**K240/1/BR** 017082		
	630	Stranded, 1 x (240 – 300), 2 x (50 – 240)	**K2X240/1/BR** 019455		

Insulated enclosure description	Retrofit terminals with 3-pole switches: for 4th and 5th (if required) conductor (N, PE-conductor), with 4-pole switches: for 5th conductor (PE conductor)	Notes
CI23-150	K10/1, K25/1	Suitable for installation of circuit-breakers and switch-disconnectorsEnclosure for separate mounting with top and bottom cable entry. Include fixing straps for wall mounting. Short-circuit resistance at 415 V 50/60 Hz to 10 kA. Cannot be used in combination with NZM…-XR… remote operator…, NZM…-XSV plug-in unit or NZM…-XAV withdrawable unit. Insulated additional terminal for 4th or 5th pole should be ordered separately. CI23 enclosure with flanges CI43, CI45 and CI48 feature gland plates. **Only for switches with tunnel clamps for direct connection of cables.**
CI43-150	K10/1, K25/1, K50/1, K95/1N/BR	
CI43-200	K10/1, K25/1, K50/1, K95/1N/BR	
CI43-200		
CI45-200	K10/1, K25/1, K50/1, K95/1N/BR, K150/1/BR, K240/1/BR	
CI48-250	K95/1N/BR, K150/1/BR, K240/1/BR, K2X240/1/BR	
CI23-150	K10/1, K25/1	
CI43-150	K10/1, K25/1, K50/1, K95/1N/BR	
CI43-200	K10/1, K25/1, K50/1, K95/1N/BR	
CI43-200	K10/1, K25/1, K50/1, K95/1N/BR, K150/1/BR, K240/1/BR	
CI45-200	K10/1, K25/1, K50/1, K95/1N/BR, K150/1/BR, K240/1/BR	
CI48-250	K95/1N/BR, K150/1/BR, K240/1/BR, K2X240/1/BR	

	For use with		Part no. Order number for separate orders	Price see price list	Std. pack	Notes
Earth-fault release						
Suitable for use in three- and single-phase systems						
Pulse current sensitive according to core-balance principle						
For 3- and 4 pole LZM1(-4) circuit-breakers dependant on mains power U_e = 200 … 415 V 50/60 Hz,						
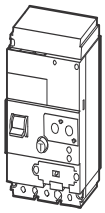 Rated fault current $I_{\Delta n}$ = 0.03 A	NZM1	3 pole	**NZM1-XFI30R** 104603		1 off	IEC/EN 60947-2 With $I_{\Delta n}$ = 0.03 A: delay time t_v always fixed settings at 10 ms. Alarm message > 30 % $I_{\Delta n}$ via yellow LED. Trip indication max. 2 auxiliary contacts (HIAFI) can be fitted by user: N/O = M22-K01, N/C = M22-K10 are reset via the reset toggle lever. If the trip-indicating auxiliary contact in the fault current block is used, the N/C contacts operates as a N/O contact and the N/C contact operates as an N/O contact (see HIAFI marking). Not in combination with insulated enclosure or main switch assembly kit for side panel mounting with mounting bracket NZM1-XFI…U not in combination with shunt or undervoltage relase. Rated ultimate short-circuit breaking capacity is determined by the fitted LZM1.
	NZM1-4	4 pole	**NZM1-4-XFI30R** 104606			
Rated fault current $I_{\Delta n}$ = 0.3 A	NZM1	3 pole	**NZM1-XFI300R** 104604			
	NZM1-4	4 pole	**NZM1-4-XFI300R** 104607			
Rated fault current $I_{\Delta n}$ = 0.03 – 0.1 – 0.3 – 0.5 – 1 – 3 A, delay time t_v = 10 – 60 – 150 – 300 – 450 ms.	NZM1	3 pole	**NZM1-XFIR** 104605			
	NZM1-4	4 pole	**NZM1-4-XFIR** 104608			
Bottom mounting up to 100 A						
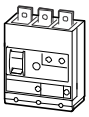 Rated fault current $I_{\Delta n}$ = 0.03 A	NZM1	3 pole	**NZM1-XFI30U**[1] 104609			
	NZM1-4	4 pole	**NZM1-4-XFI30U** 104612			
Rated fault current $I_{\Delta n}$ = 0.3 A	NZM1	3 pole	**NZM1-XFI300U** 104610			
	NZM1-4	4 pole	**NZM1-4-XFI300U** 104613			
Rated fault current $I_{\Delta n}$ = 0.03 – 0.1 – 0.3 – 0.5 – 1 – 3 A, delay time t_v = 10 – 60 – 150 – 300 – 450 ms.	NZM1	3 pole	**NZM1-XFIU** 104611			
	NZM1-4	4 pole	**NZM1-4-XFIU** 104614			
Pulse current sensitive according to core-balance principle						
For 4 pole circuit-breaker LZM2-4 independent of mains voltage U_e = 280 – 690 V 50/60 Hz bottom mounting up to 250 A						IEC/EN 60947-2 Auxiliary contacts (1 N/O, 1N/C integrated) are reset via the reset button. Not in combination with plug-in units, insulated enclosure or main switch assembly kit for side panel mounting with mounting bracket. Rated ultimate short-circuit breaking capacity is determined by the fitted LZM2.
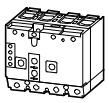 Rated fault current $I_{\Delta n}$ = 0.03 A	NZM2-4	4 pole	**NZM2-4-XFI30** 292343		1 off	
Rated fault current $I_{\Delta n}$ 0.1 - 0.3 - 1 - 3 A, delay time t_v = 60 - 150 - 300 - 450 ms	NZM2-4	4 pole	**NZM2-4-XFI** 292344		1 off	
Core-balance principle with AC/DC current sensitivity (in range 0 – 100 kHz)						
For 4 pole LZM2-4 circuit-breakers internal power supply U_e = 50 … 400 V, bottom mounting up to 250 A						IEC/EN 60947-2 Observe response threshold dependence on frequency! See "Frequency response" characteristic curve Auxiliary contacts (1 N/O, 1N/C integrated) are reset via the reset button. Not in combination with plug-in units, insulated enclosure or main switch assembly kit for side panel mounting with mounting bracket. Rated ultimate short-circuit breaking capacity is determined by the fitted LZM2.
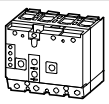 Rated fault current $I_{\Delta n}$ = 0.03 A	NZM2-4	4 pole	**NZM2-4-XFIA30** 292345		1 off	
Rated fault current $I_{\Delta n}$ 0.1 - 0.3 - 1 A, delay time t_v = 60 - 150 - 300 - 450 ms	NZM2-4	4 pole	**NZM2-4-XFIA** 292346		1 off	

Notes [1] Suitable for use in three-phase systems

	For use with	Part no. Article no. when ordered with basic unit	Price see price list	Std. pack	Notes
Earth-fault release, 3-pole, 4-pole					
Not dependent on mains and control voltages I_g = 0.35 – 0.4 – 0.5 – 0.6 – 0.7 – 0.8 – 0.9 – 1.0 x I_n t_g = 0 – 20 – 60 – 100 – 200 – 300 – 500 – 750 – 1000 ms	LZM3	**+NZM3-XT** 260756		1 off	Only suitable for use in conjunction with circuit-breakers having electronic releases.
	LZM3-4	**+NZM3-4-XT** 260757			
	LZM4	**+NZM4-XT** 266721			
	LZM4-4	**+NZM4-4-XT** 266722			

	Description	Part no. Article no.	Price see price list	Std. pack	Notes
Residual current relay					
Pulse-current sensitive Rated control supply voltage: U_s = 230 V AC (50/60Hz) Integrated auxiliary contact (1 C/O) Ring-type transformer must also be ordered					
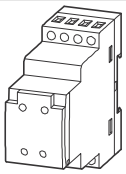	Rated fault current I_{dN} = 0.03 A	**PFR-003** 285555		1 off	
	Rated fault current I_{dN} = 0.3 A	**PFR-03** 285556			
	Rated fault current I_{dN} = 0.03 – 5 A Adjustable fault current and delay time Fault current early warning by flashing, red LED	**PFR-5** 285557			Adjustable fault current: 0.03, 0.1, 0.3, 0.5, 1, 3, 5 A Adjustable delay time: 0.02, 0.1, 0.3, 0.5, 1, 3, 5 A
Ring-type transformer					
Rated operational voltage: 690 V (50/60 Hz)					
	Internal diameter: 20 mm	**PFR-W-20** 285558		1 off	incl. fixing clip for DIN rail mounting
	Internal diameter: 30 mm	**PFR-W-30** 285559			
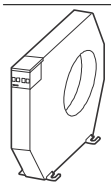	Internal diameter: 35 mm	**PFR-W-35** 285600			incl. screw fixing Alternative: fixing clip for DIN mounting rail **Design note:** The current transformer diameter must be selected 1.5 times larger than the envelope diameter of the passed through conductor.
	Internal diameter: 70 mm	**PFR-W-70** 285601			
	Internal diameter: 105 mm	**PFR-W-105** 285602			
	Internal diameter: 140 mm	**PFR-W-140** 285603			
	Internal diameter: 210 mm	**PFR-W-210** 285604			
Magnetic shielding					
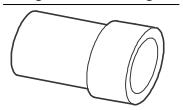	PFR-W-35	**PFR-WMA-35** 286001		1 off	Necessary for a load circuit with high inrush currents > 4 x I_n, such as for example motors and
	PFR-W-70	**PFR-WMA-70** 286002			
	PFR-W-105	**PFR-WMA-105** 286003			
	PFR-W-140	**PFR-WMA-140** 286004			
	PFR-W-210	**PFR-WMA-210** 286005			
Fixing clip					
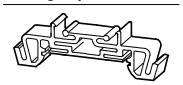	for the DIN rail mounting of the PFR-W-35 current transformer and all larger	**PFR-WC** 286006		1 off	1 set = 2 pieces

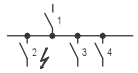

Incoming circuit-breaker

Outgoing circuit-breaker

Selectivity 415 V AC
between circuit-breakers enables separate shut-down of faulty system sections.

Selectivity (discrimination) exists between incoming breaker 1 and outgoing breaker 2 if, **only** outgoing breaker 2 trips at position 2 during a short-circuit.
System sections 3 and 4 continue to operate.

			Incoming circuit-breaker (S1)											
			LZM...1-A...							LZM...2-A...				
	I_{cu} [kA]		25(36)(50)(70)							25(36)(50)(70)				
	I_n [A]		20...40	50	63	80	100	———		20...40	50	———	80	100
Outgoing circuit-breaker (S2)	I_n [A]	$I_{cu(415V)}$ [kA]	Selectivity threshold I_s [kA] for selectivity between S2 and S1, overload and short-circuit release set to max. value											
FAZ–B(C)	0.5	15	T	T	T	T	T	T	T	T	T	T	T	T
	1	15	T	T	T	T	T	T	T	T	T	T	T	T
	2	15	2	T	T	T	T	T	T	3	T	T	T	T
	3	15	1.2	2	3	3	10	T	T	1.5	1.5	3	5	T
	4	15	1.2	2	3	3	8	T	T	1.2	1.5	3	4	T
	6	15	1.2	2	2.5	3	5	10	10	1.2	1.5	2.5	3	T
	10	15	1.2	1.5	2	2	4	10	10	1	1.5	2.5	3	10
	13	15	1	1.5	2	2	4	10	10	1	1.2	2	3	10
	16	15	1	1.2	1.5	2	3	8	8	1	1.2	1.5	2.5	10
	20	15	0.8	1.2	1.5	1.5	3	8	8	1	1.2	1.5	2.5	10
	25	15	0.7	1.2	1.5	1.5	3	7	7	0.8	1	1.5	2	10
	32	15	–	1.2	1	1.5	2	6	6	–	1	1.5	2	8
	40	15	–	–	1	1.5	2	5	5	–	–	1.2	1.5	7
	50	15	–	–	–	1.2	1.5	4	4	–	–	–	1.5	6
	63	15	–	–	–	–	1.5	3	3	–	–	–	–	6
PKZM0-...	0.16	100	T	T	T	T	T	T	T	T	T	T	T	T
	0.25	100	T	T	T	T	T	T	T	T	T	T	T	T
	0.4	100	T	T	T	T	T	T	T	T	T	T	T	T
	0.63	100	T	T	T	T	T	T	T	T	T	T	T	T
	1	100	T	T	T	T	T	T	T	T	T	T	T	T
	1.6	100	T	T	T	T	T	T	T	T	T	T	T	T
	2.5	100	T	T	T	T	T	T	T	T	T	T	T	T
	4	100	T	T	T	T	T	T	T	T	T	T	T	T
	6.3	100	4	5	5	T	T	T	T	2	3	4	5	T
	10	100	3	4	5	6	25	T	T	1.5	2.5	4	4	T
	12	50	3	4	5	6	25	T	T	1.5	2.5	4	4	T
	16	50	1.5	1.5	2	3	5	7	T	1	1.6	2	2.5	T
	20	50	0.8	1.5	1.5	2	3	5	T	0.8	1.2	1.5	2	T
	25	50	–	1	1.5	1.5	2.5	4	T	–	1	1.5	2	10
	32	50	–	–	1	1	2	3.5	T	–	–	1	1.5	8
PKZ2/ZM-...	0.6	100	T	T	T	T	T	T	T	T	T	T	T	T
	1.0	100	T	T	T	T	T	T	T	T	T	T	T	T
	1.6	100	T	T	T	T	T	T	T	T	T	T	T	T
	2.4	100	1.2	2	2.5	10	T	T	T	1.2	2	2.5	10	T
	4	100	1	1.5	2	2.5	2.5	4	10	1	1.5	2	2.5	2.5
	6	100	0.6	0.8	1	1.2	2	3	8	0.6	0.8	1	1.2	2
	10	100	0.5	0.7	0.8	1	1.2	2	4	0.5	0.7	0.8	1	1.2
	16	100	0.5	0.6	0.7	0.8	1.2	1.5	3	0.5	0.6	0.7	0.8	1.2
	25	30	–	0.6	0.7	0.7	1.2	1.5	2	–	0.6	0.7	0.7	1.2
	32	30	–	–	0.6	0.7	1.2	1.5	2	–	–	0.6	0.7	1.2
	40	30	–	–	0.6	0.7	1	1.5	2	–	–	0.6	0.7	1
PKZM4	16	100	0.5	0.8	0.8	0.8	2	5	5	0.5	0.8	0.8	0.8	2
	25	100	–	0.7	0.8	0.8	1.5	5	5	–	0.7	0.8	0.8	1.5
	32	50	–	–	0.8	0.8	1.5	4	4	–	–	0.8	0.8	1.5
	40	50	–	–	–	0.8	1.5	3	3	–	–	–	0.8	1.5
	50	50	–	–	–	–	1	2.5	2.5	–	–	–	–	1
	58	50	–	–	–	–	–	2.5	2.5	–	–	–	–	–
	63	50	–	–	–	–	–	2	2	–	–	–	–	–

Notes T: full selectivity

			Incoming circuit-breaker (S1)																
			LZM..2-A...					LZM...3-AE...		LZM...3-VE...		LZM...4-AE...				LZM...4-VE...			
	I_{cu} [kA]		25(36)(50)(70)					50(70)		50(70)		50(70)				50(70)			
	I_n [A]		125	160	200	250	———	400	630	400	630	800	1000	1250	1600	800	1000	1250	1600
Outgoing circuit-breaker (S2)	I_n [A]	$I_{cu(415V)}$ [kA]	Selectivity threshold I_s [kA] for selectivity between S2 and S1, overload and short-circuit release set to max. value																
FAZ–B(C)	0.5	15	T	T	T	T	T	T	T	T	T	T	T	T	T	T	T	T	T
	1	15	T	T	T	T	T	T	T	T	T	T	T	T	T	T	T	T	T
	2	15	T	T	T	T	T	T	T	T	T	T	T	T	T	T	T	T	T
	3	15	T	T	T	T	T	T	T	T	T	T	T	T	T	T	T	T	T
	4	15	T	T	T	T	T	T	T	T	T	T	T	T	T	T	T	T	T
	6	15	T	T	T	T	T	T	T	T	T	T	T	T	T	T	T	T	T
	10	15	10	10	10	10	10	T	T	T	T	T	T	T	T	T	T	T	T
	13	15	10	10	10	10	10	T	T	T	T	T	T	T	T	T	T	T	T
	16	15	10	10	10	10	10	T	T	T	T	T	T	T	T	T	T	T	T
	20	15	10	10	10	10	10	T	T	T	T	T	T	T	T	T	T	T	T
	25	15	10	10	10	10	10	T	T	T	T	T	T	T	T	T	T	T	T
	32	15	8	8	8	10	10	T	T	T	T	T	T	T	T	T	T	T	T
	40	15	7	7	7	10	10	T	T	T	T	T	T	T	T	T	T	T	T
	50	15	6	6	6	10	10	T	T	T	T	T	T	T	T	T	T	T	T
	63	15	6	6	6	10	10	T	T	T	T	T	T	T	T	T	T	T	T
PKZM0-...	0.16	100	T	T	T	T	T	T	T	T	T	T	T	T	T	T	T	T	T
	0.25	100	T	T	T	T	T	T	T	T	T	T	T	T	T	T	T	T	T
	0.4	100	T	T	T	T	T	T	T	T	T	T	T	T	T	T	T	T	T
	0.63	100	T	T	T	T	T	T	T	T	T	T	T	T	T	T	T	T	T
	1	100	T	T	T	T	T	T	T	T	T	T	T	T	T	T	T	T	T
	1.6	100	T	T	T	T	T	T	T	T	T	T	T	T	T	T	T	T	T
	2.5	100	T	T	T	T	T	T	T	T	T	T	T	T	T	T	T	T	T
	4	100	T	T	T	T	T	T	T	T	T	T	T	T	T	T	T	T	T
	6.3	100	T	T	T	T	T	T	T	T	T	T	T	T	T	T	T	T	T
	10	100	T	T	T	T	T	T	T	T	T	T	T	T	T	T	T	T	T
	12	50	T	T	T	T	T	T	T	T	T	T	T	T	T	T	T	T	T
	16	50	T	T	T	T	T	T	T	T	T	T	T	T	T	T	T	T	T
	20	50	T	T	T	T	T	T	T	T	T	T	T	T	T	T	T	T	T
	25	50	T	T	T	T	T	T	T	T	T	T	T	T	T	T	T	T	T
	32	50	40	T	T	T	T	T	T	T	T	T	T	T	T	T	T	T	T
PKZ2/ZM-...	0.6	100	T	T	T	T	T	T	T	T	T	T	T	T	T	T	T	T	T
	1.0	100	T	T	T	T	T	T	T	T	T	T	T	T	T	T	T	T	T
	1.6	100	T	T	T	T	T	T	T	T	T	T	T	T	T	T	T	T	T
	2.4	100	T	T	T	T	T	T	T	T	T	T	T	T	T	T	T	T	T
	4	100	10	10	10	T	T	T	T	T	T	T	T	T	T	T	T	T	T
	6	100	8	8	8	10	10	T	T	T	T	T	T	T	T	T	T	T	T
	10	100	4	4	4	5	5	13	T	13	T	T	T	T	T	T	T	T	T
	16	100	3	3	3	4	4	7	T	7	T	T	T	T	T	T	T	T	T
	25	30	2	2	2	3	3	5	20	5	20	T	T	T	T	T	T	T	T
	32	30	2	2	2	3	3	3.5	15	3.5	15	T	T	T	T	T	T	T	T
	40	30	2	2	2	2	2	3.5	15	3.5	15	T	T	T	T	T	T	T	T
PKZM4	16	100	5	5	5	5	5	16	45	16	45	T	T	T	T	T	T	T	T
	25	100	5	5	5	5	5	10	25	10	25	42	T	T	T	42	T	T	T
	32	50	4	4	4	4	4	8	18	8	18	30	45	T	T	30	45	T	T
	40	50	3	3	3	3	3	8	18	8	18	30	45	T	T	30	45	T	T
	50	50	2.5	2.5	2.5	2.5	2.5	8	18	8	18	30	45	T	T	30	45	T	T
	58	50	2.5	2.5	2.5	2.5	2.5	6.5	15	6.5	15	25	40	T	T	25	40	T	T
	63	50	2	2	2	2	2	6.5	15	6.5	15	25	40	T	T	25	40	T	T

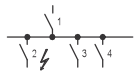

Incoming circuit-breaker

Outgoing circuit-breaker

Selectivity 415 V AC

between circuit-breakers enables separate shut-down of faulty system sections.
Selectivity (discrimination) exists between incoming breaker 1 and outgoing breaker 2 if, **only** outgoing breaker 2 trips at position 2 during a short-circuit.
System sections 3 and 4 continue to be operational.

			Incoming circuit-breaker (S1)											
			LZM...1-A...							LZM...2-A...				
	I_{cu}[kA]		25(36)(50)(70)							25(36)(50)(70)				
	I_n[A]		20...40	50	63	80				20...40	50		80	100
Outgoing circuit-breaker (S2)	I_n [A]	$I_{cu(415V)}$ [kA]	Prospective short-circuit current (kA). Set the overload and short-circuit release of the incoming circuit-breaker to the max. value.											
LZM...1-A...	20...40	25...100	–	–	0.5	0.7	0.8	1.5	1.5	–	–	0.6	0.8	1.5
	50	25...100	–	–	–	0.6	0.8	1.5	1.5	–	–	–	0.8	1.5
	63	25...100	–	–	–	–	0.8	1.5	1.5	–	–	–	–	1.5
	80	25...100	–	–	–	–	–	1.5	1.5	–	–	–	–	–
	100	25...100	–	–	–	–	–	–	1.5	–	–	–	–	–
	125	25...100	–	–	–	–	–	–	–	–	–	–	–	–
	160	25...100	–	–	–	–	–	–	–	–	–	–	–	–
LZM...2-A...	20...40	25...150	–	–	0.5	0.6	0.8	1	1	–	–	0.5	0.6	0.8
	50	25...150	–	–	–	0.6	0.8	1	1	–	–	–	0.6	0.8
	63	25...150	–	–	–	–	0.8	1	1	–	–	–	–	0.8
	80	25...150	–	–	–	–	–	1	1	–	–	–	–	–
	100	25...150	–	–	–	–	–	–	1	–	–	–	–	–
	125	25...150	–	–	–	–	–	–	–	–	–	–	–	–
	160	25...150	–	–	–	–	–	–	–	–	–	–	–	–
	200	25...150	–	–	–	–	–	–	–	–	–	–	–	–
	250	25...150	–	–	–	–	–	–	–	–	–	–	–	–
LZM...2-VE...	100	50...150	–	–	–	–	–	–	–	–	–	–	–	–
	160	50...150	–	–	–	–	–	–	–	–	–	–	–	–
	250	50...150	–	–	–	–	–	–	–	–	–	–	–	–
LZM...3-AE...	250	50...150	–	–	–	–	–	–	–	–	–	–	–	–
	400	50...150	–	–	–	–	–	–	–	–	–	–	–	–
	630	50...150	–	–	–	–	–	–	–	–	–	–	–	–
LZM...3-VE...	250	50...150	–	–	–	–	–	–	–	–	–	–	–	–
	400	50...150	–	–	–	–	–	–	–	–	–	–	–	–
	630	50...150	–	–	–	–	–	–	–	–	–	–	–	–
LZM...4-AE...	630	50...100	–	–	–	–	–	–	–	–	–	–	–	–
	800	50...100	–	–	–	–	–	–	–	–	–	–	–	–
	1000	50...100	–	–	–	–	–	–	–	–	–	–	–	–
	1250	50...100	–	–	–	–	–	–	–	–	–	–	–	–
	1600	50...100	–	–	–	–	–	–	–	–	–	–	–	–
LZM...4-VE...	630	50...100	–	–	–	–	–	–	–	–	–	–	–	–
	800	50...100	–	–	–	–	–	–	–	–	–	–	–	–
	1000	50...100	–	–	–	–	–	–	–	–	–	–	–	–
	1250	50...100	–	–	–	–	–	–	–	–	–	–	–	–
	1600	50...100	–	–	–	–	–	–	–	–	–	–	–	–

Notes T: total selectivity

Incoming circuit-breaker (S1)																		
LZM...2-A...					LZM...3-AE...		LZM...3-VE...		LZM...4-AE...				LZM...4-VE...			
25(36)(50)(70)					50(70)		50(70)		50(70)				50(70)			
125	160	200			400	630	400	630	800	1000	1250	1600	800	1000	1250	1600
Prospective short-circuit current (kA). Set the overload and short-circuit release of the incoming circuit-breaker to the max. value.																
1.5	1.5	2	3	3	20	20	25	25	T	T	T	T	T	T	T	T
1.5	1.5	2	3	3	20	20	25	25	T	T	T	T	T	T	T	T
1.5	1.5	2	3	3	15	15	20	20	T	T	T	T	T	T	T	T
1.5	1.5	2	3	3	15	15	20	20	T	T	T	T	T	T	T	T
–	1.5	2	3	3	15	15	20	20	T	T	T	T	T	T	T	T
–	–	2	3	3	15	15	20	20	T	T	T	T	T	T	T	T
–	–	2	3	3	15	15	20	20	T	T	T	T	T	T	T	T
1	1.2	1.6	2	2	15	15	20	20	T	T	T	T	T	T	T	T
1	1.2	1.6	2	2	15	15	20	20	T	T	T	T	T	T	T	T
1	1.2	1.6	2	2	15	15	20	20	T	T	T	T	T	T	T	T
1	1.2	1.6	2	2	15	15	20	20	T	T	T	T	T	T	T	T
–	1.2	1.6	2	2	15	15	20	20	T	T	T	T	T	T	T	T
–	–	1.6	2	2	15	15	20	20	T	T	T	T	T	T	T	T
–	–	–	2	2	10	10	15	15	T	T	T	T	T	T	T	T
–	–	–	–	–	10	10	15	15	T	T	T	T	T	T	T	T
–	–	–	–	–	10	10	15	15	T	T	T	T	T	T	T	T
–	1.2	1.6	2	2	7	10	8	11	20	50	T	T	20	50	T	T
–	–	–	–	–	7	10	8	11	20	50	T	T	20	50	T	T
–	–	–	–	–	7	10	8	11	20	50	T	T	20	50	T	T
–	–	–	–	–	5	7.5	10	12	T/80	T/80	T/80	T/80	T/80	T/80	T/80	T/80
–	–	–	–	–	–	7.5	–	12	T/80	T/80	T/80	T/80	T/80	T/80	T/80	T/80
–	–	–	–	–	–	–	–	–	T/80	T/80	T/80	T/80	T/80	T/80	T/80	T/80
–	–	–	–	–	3.5	4	10	12	T/80	T/80	T/80	T/80	T/80	T/80	T/80	T/80
–	–	–	–	–	–	4	–	12	T/80	T/80	T/80	T/80	T/80	T/80	T/80	T/80
–	–	–	–	–	–	–	–	–	T/80	T/80	T/80	T/80	T/80	T/80	T/80	T/80
–	–	–	–	–	–	–	–	–	10	15	20	20	10	15	20	20
–	–	–	–	–	–	–	–	–	–	–	20	20	–	–	20	20
–	–	–	–	–	–	–	–	–	–	–	20	20	–	–	20	20
–	–	–	–	–	–	–	–	–	–	–	–	20	–	–	–	20
–	–	–	–	–	–	–	–	–	–	–	–	–	–	–	–	–
–	–	–	–	–	–	–	–	–	10	15	20	20	10	15	20	20
–	–	–	–	–	–	–	–	–	–	–	20	20	–	–	20	20
–	–	–	–	–	–	–	–	–	–	–	20	20	–	–	20	20
–	–	–	–	–	–	–	–	–	–	–	–	20	–	–	–	20
–	–	–	–	–	–	–	–	–	–	–	–	–	–	–	–	–

Protection of PVC insulated cables against thermal overload with short-circuits

According to VDE 0100 part 430 cables and conductors must be protected against short-circuit and overload. The overload protection is obtained by using LZM circuit-breakers with settable, current-dependent, delayed overload release.

Short-circuit protection is provided by adjustable instantaneous releases, which open the main contacts in less than 25 ms. The short-circuit total opening time restricts the temperature rise of the cable to a minimum.

The tables indicate the minimum conductor cross-section reliably protected by circuit-breakers during a short-circuit. (Operating voltage U_N = 415 V)

	Min. protected cross-section mm² copper
LZM...1(-4)-...20	6
LZM...1(-4)-...25 … 160	10
LZM...2(-4)-...20 … 300	10
LZM...3(-4)-...250 … 630	16
LZM...4(-4)-...630 … 1600	95

Back-up protection

between LZM(N)(S) incoming circuit-breaker and LZMB(C)(N)(S) outgoing circuit-breaker

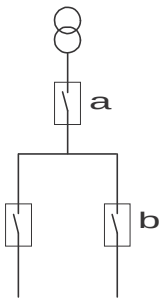

			Incoming circuit-breaker a									
			LZM1				LZM2				LZM3	
		I_n	up to 160 A				up to 300 A				up to 630 A	
		$I_{cu(415\ V)}$		36 kA		70 kA		36 kA		70 kA		70 kA
Outgoing circuit-breaker b												
	$I_{cu(415\ V)}$	I_n										
LZMB1	25 kA	up to 160 A		36		70		36		70		70
LZMC1	36 kA	up to 160 A	–	36		70		36		70		70
LZMN1	50 kA	up to 160 A	–	–		70	–	–		70		70
LZMS1	70 kA	up to 160 A	–	–	–	70	–	–	–	70	–	70
LZMB2	25 kA	up to 300 A		36		70		36		70		70
LZMC2	36 kA	up to 300 A	–	36		70	–	36		70		70
LZMN2	50 kA	up to 300 A	–	–		70	–	–		70		70
LZMS2	70 kA	up to 300 A	–	–	–	–	–	–	–	70	–	70
LZMN3	50 kA	up to 630 A	–	–	–	–	–	–	–	–		70
LZMS3	70 kA	up to 630 A	–	–	–	–	–	–	–	–	–	70

Where the prospective fault current at the point of installation of circuit-breakers is very high, it is conventional to use LZMN(S) current-limiting circuit-breakers. An attractively priced alternative is to fit a LZMN(S) current-limiting circuit-breaker upstream of LZMB(C)(N) standard circuit-breakers, if the fault level is too high for LZMB(C)(N) switches.

The table shows which current-limiting circuit-breaker LZMN(S) in combination with LZMB(C)(N) are to be used to provide protection at the network locations with high short-circuit capacities.

The selectivity limit is determined by the response current of the non-delayed short-circuit release in the upstream incoming circuit-breaker. In many applications this is sufficient.

between LZM...1-A... incoming circuit-breaker and FAZ-B(C)/PLSM-B(C)... outgoing circuit-breaker

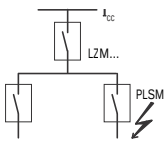

Outgoing circuit-breaker	Outgoing circuit-breaker LZM(B)(C)2-A...	LZMC(N)(S)1-A...
FAZ-B(C)...		
0,5 – 16	25 kA	30 kA
20 – 40	20 kA	20 kA
50, 63	15 kA	15 kA
PLSM-B(C)...(/...)		
0,5 – 16	25 kA	30 kA
20 – 40	20 kA	20 kA
50, 63	15 kA	15 kA

between LZM...2-A... incoming circuit-breaker and FAZ-B(C)/PLSM-B(C)... outgoing circuit-breaker

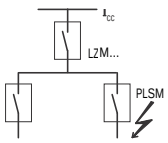

Outgoing circuit-breaker	Incoming circuit-breaker LZMB(C)2-A...	LZMN(S)2-A...
FAZ-B(C)...		
0,5 – 10	25 kA	50 kA
13 – 32	25 kA	30 kA
40 – 63	20 kA	20 kA
PLSM-B(C)...(/...)		
0,5 – 10	25 kA	50 kA
13 – 32	25 kA	30 kA
40 – 63	20 kA	20 kA

Direction of blow-out

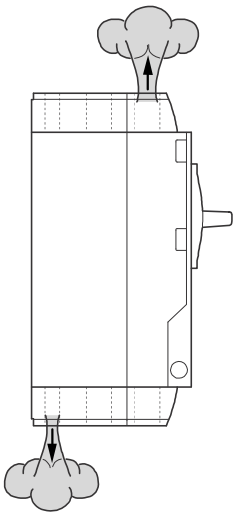

	Top, front	Bottom, rear
LZM1	X	–
LZM2[1)]	X	X
LZM3	X	X
LZM4	X	–

[1)] LZM2B(C) – A … as LZM1

Minimum clearances

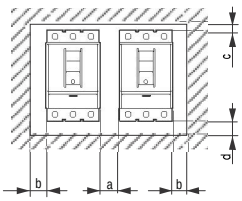

between two adjacently mounted switches
Minimum clearance a in mm

	LZM1	LZM2	LZM3	LZM4
LZM1	0	5	5	15
LZM2	5	5	5	15
LZM3	5	5	5	15
LZM4	15	15	15	15

between switch and other parts
Minimum clearances in mm

	b		c		d	
	F 690 V	1000 V	F 690 V	1000 V	F 690 V	1000 V
LZM1	0	–	60	–	0	–
LZM2[1)]	5	5	35	35	35	35
LZM3	5	5	60	60	60	60
LZM4	15	15	100	200	0	0

[1)] LZM2B(C) – A … C= 60 mm, d = 0 mm

Dimensions

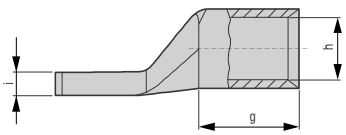

For pressing the cable lugs a press tool K22, HK60/22 or EK22
from the company Klauke is necessary with the following press inserts:
R22/95 for 95 mm²
R22/120 for 120 mm²
R22/150 for 150 mm²
R22/185 for 185 mm²
R22/240 for 240 mm²

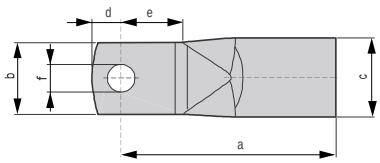

Cable lug	For use with	Rated cross section	Terminal bolt	Dimensions in mm								
		mm²	o	a	b	c	d	e	f	g	h	i
KS95-NZM7	LZM2	95	M8	53_{+2}	$23_{g0.5}$	$18_{g0.2}$	10_{g1}	19	8,5	25	13,5	4,4
KS120-NZM7	LZM2	120	M8	56_{+2}	$23_{g}0.5$	$19.5_{g0.2}$	$10_{g}1$	19	8,5	26	15	4,4
KS150-NZM7	LZM2	150	M8	61_{+2}	$23_{g}0.5$	$21_{g0.2}$	$10_{g}1$	19	8,5	30	16,5	4,4
NZM2-XKS185	LZM2	185	M8	$65_{g1.5}$	22_{g1}	$24_{g0.3}$	$9^{+1}_{-0,5}$	$19^{+2,5}_{-0,5}$	$8.5^{+0,05}_{-0,1}$	30_{g2}	$19_{g0.4}$	7
NZM3-XKS185	LZM3, LZM4	185	M10	65	24,5	24	11,5	18	10,5	30	19	$7.0_{g0.8}$
NZM3-XKS240	LZM3, LZM4	240	M10	72	31	26	11,5	19	10,5	35	21	$5.0_{g0.8}$

Front cut-out

Cut-out a
toggle lever

Cut-out b
rotary handle,
remote operator

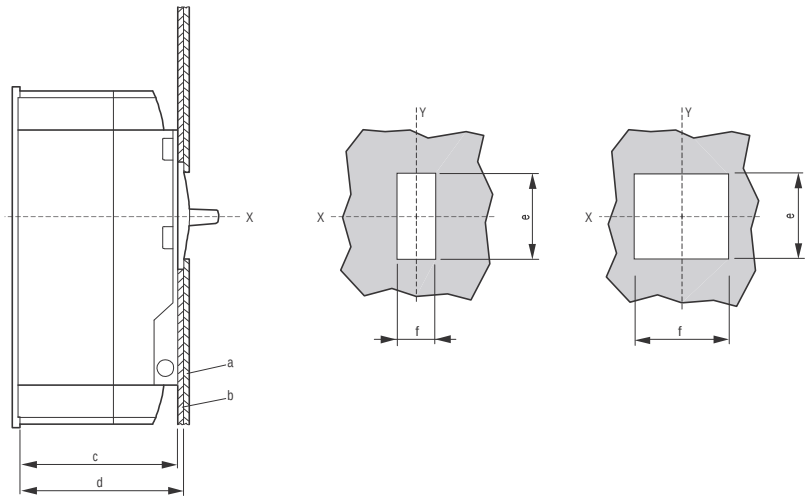

	Distance from mounting plate and door cutout		Cut-out a		Cut-out b	
	c mm	d mm	e mm	f mm	e mm	f mm
LZM1	68	73	40	23	46	91
LZM2	103	108	79	36	96	101
LZM3	120.5	125.5	79	36	96	136
LZM4	138	146	101	105	118	204

Standard auxiliary contact (HIN)

Early-make auxiliary contact (HIV)

Trip-indicating auxiliary contact (HIA)

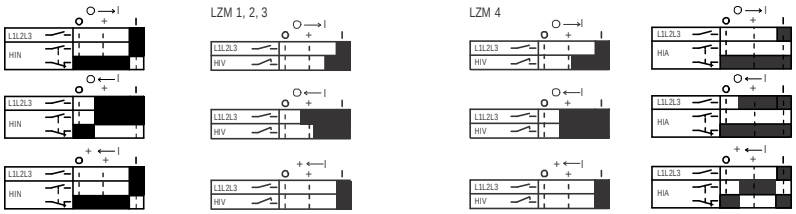

0 ▮ I Switching on

0 m I Switching off

+ m I Trip

Q Contact closed

q Contact open

Notes If early-make contacts are required in combination with shunt or undervoltage releases, please select the combination type in the “Release” section.

Interlocking variants and combination options

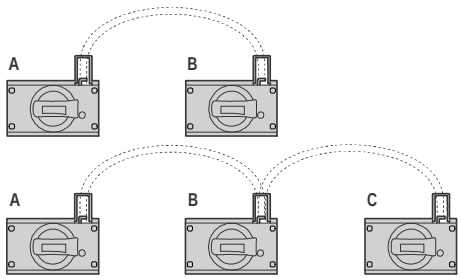

A	B
OFF	OFF
ON/TRIP	~~ON~~
~~ON~~	ON/TRIP

A	B	C
OFF	OFF	OFF
~~ON~~	ON/TRIP	~~ON~~
ON/TRIP	~~ON~~	ON/TRIP

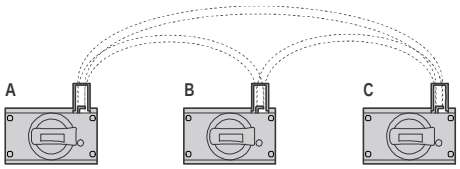

A	B	C
OFF	OFF	OFF
ON/TRIP	~~ON~~	~~ON~~
~~ON~~	ON/TRIP	~~ON~~
~~ON~~	~~ON~~	ON/TRIP

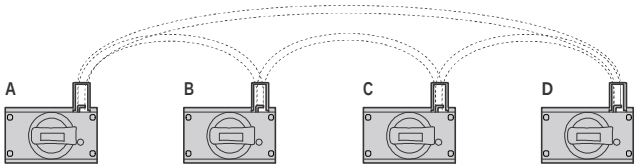

A	B	C	D
OFF	OFF	OFF	OFF
ON/TRIP	~~ON~~	ON/TRIP	~~ON~~
~~ON~~	ON/TRIP	~~ON~~	ON/TRIP

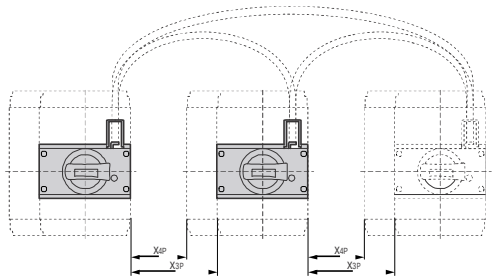

= Switch clearance 3 pole
= Switch clearance 4 pole

NZM-XBZ225						right switch			
max. switch clearance		LZM1		LZM2		LZM3		LZM4	
		X_{3P}	X_{4P}	X_{3P}	X_{4P}	X_{3P}	X_{4P}	X_{3P}	X_{4P}
left switch		mm	mm	mm	mm	mm	mm	mm	mm
LZM1	3/4 pole	135	105	120	85	135	90	125	80
LZM2	3/4 pole	135	105	120	85	135	90	125	80
LZM3	3/4 pole	90	75	75	35	85	40	80	45
LZM4	3/4 pole	50	35	40	15	25	–	15	–

NZM-XBZ600						right switch			
max. switch clearance		LZM1		LZM2		LZM3		LZM4	
		X_{3P}	X_{4P}	X_{3P}	X_{4P}	X_{3P}	X_{4P}	X_{3P}	X_{4P}
left switch		mm	mm	mm	mm	mm	mm	mm	mm
LZM1	3/4 pole	510	480	495	460	510	465	475	405
LZM2	3/4 pole	510	480	495	460	510	465	475	405
LZM3	3/4 pole	460	430	450	410	460	415	460	390
LZM4	3/4 pole	400	370	380	340	400	375	390	320

NZM-XBZ1000						right switch			
max. switch clearance		LZM1		LZM2		LZM3		LZM4	
		X_{3P}	X_{4P}	X_{3P}	X_{4P}	X_{3P}	X_{4P}	X_{3P}	X_{4P}
left switch		mm	mm	mm	mm	mm	mm	mm	mm
LZM1	3/4 pole	910	880	895	860	910	865	865	795
LZM2	3/4 pole	910	880	895	860	910	865	865	795
LZM3	3/4 pole	820	790	850	810	860	815	860	790
LZM4	3/4 pole	750	720	730	700	800	775	790	720

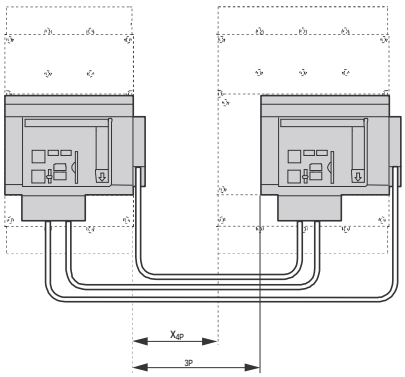

X_{3p} = max. switch clearance 3 pole
X_{4p} = max. switch clearance 4 pole

XMVR mechanical interlock
(Mounting adjacent)

NZM...-XMVR

Max. switch clearance right switch

		LZM2		LZM3		LZM4	
		X_{3p}	X_{4p}	X_{3p}	X_{4p}	X_{3p}	X_{4p}
left switch		mm	mm	mm	mm	mm	mm
LZM2	3/4 pole	130	95	95	50	–	–
LZM3	3/4 pole	–	–	135	90	155	85
LZM4	3/4 pole	–	–	–	–	120	50

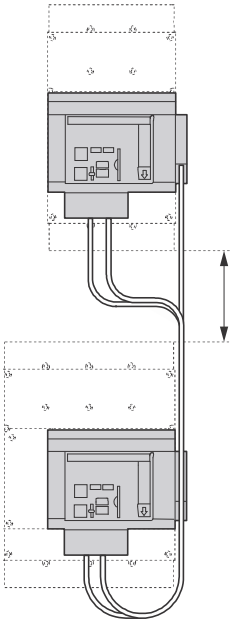

XMVRL mechanical interlock
Mounting in adjacent enclosures

NZM...-XMVRL

Max. switch clearance right switch

		LZM2		LZM3		LZM4	
		X_{3p}	X_{4p}	X_{3p}	X_{4p}	X_{3p}	X_{4p}
left switch		mm	mm	mm	mm	mm	mm
LZM2	3/4 pole	350	315	420	385	–	–
LZM3	3/4 pole	–	–	400	365	460	390
LZM4	3/4 pole	–	–	–	–	420	350

XMVRL mechanical interlock
(Mounting one above the other)

NZM…-XMVRL

Max. switch clearance Switch top

		LZM2	LZM3	LZM4
		3/4 pole	3/4 pole	3/4 pole
		Y	Y	Y
Switch bottom		mm	mm	mm
LZM2	3/4 pole	220	225	–
LZM3	3/4 pole	–	220	230
LZM4	3/4 pole	–	–	230

Y = max. switch clearance

Ring-type transformer

Maximum rated current [A]		Diameter	
Power distribution	**Motor/capacitor**	**Transformer part no. PFR-W-… d1**	**Max. conductor circumference (mm) d2**
50	50	20	13
150	100	30	20
150	100	35	23
400	200	70	47
600	250	105	70
1200	630	140	93
1800	800	210	140

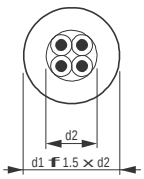

System and line protection with LZM1

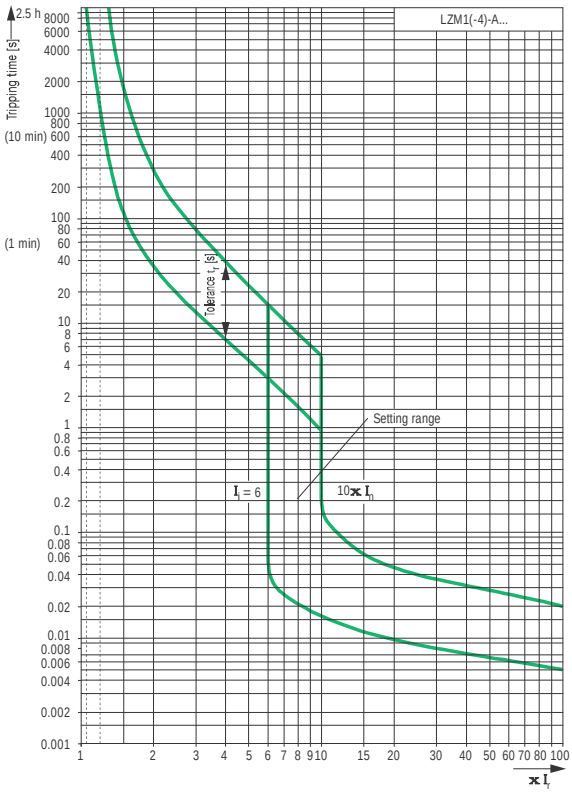

Motor protection with LZM1

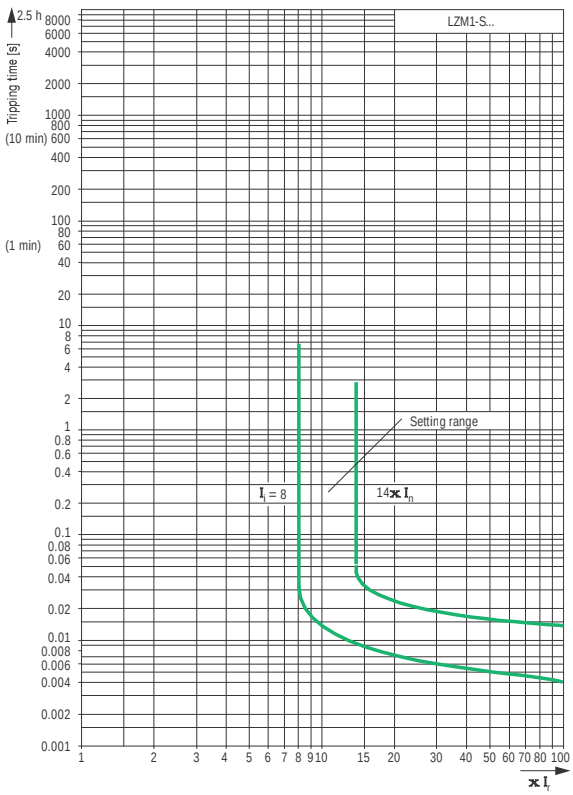

System and line protection with LZM2

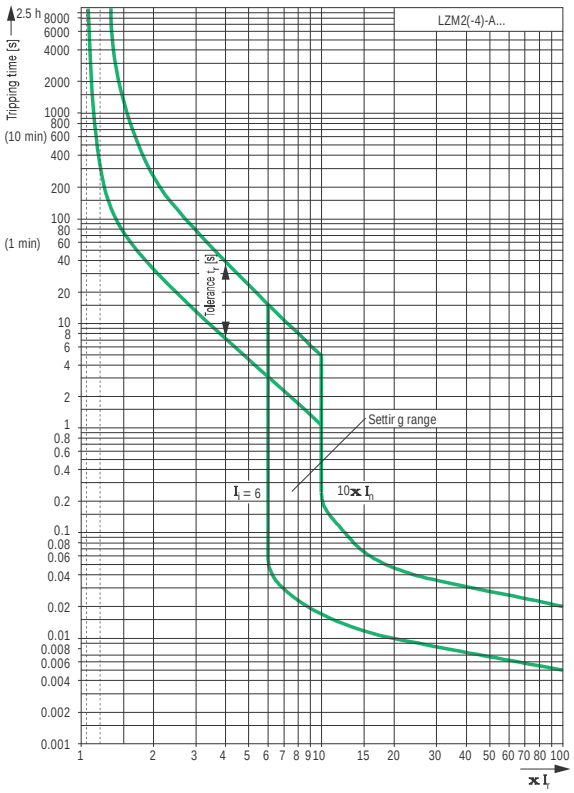

Motor protection with LZM2

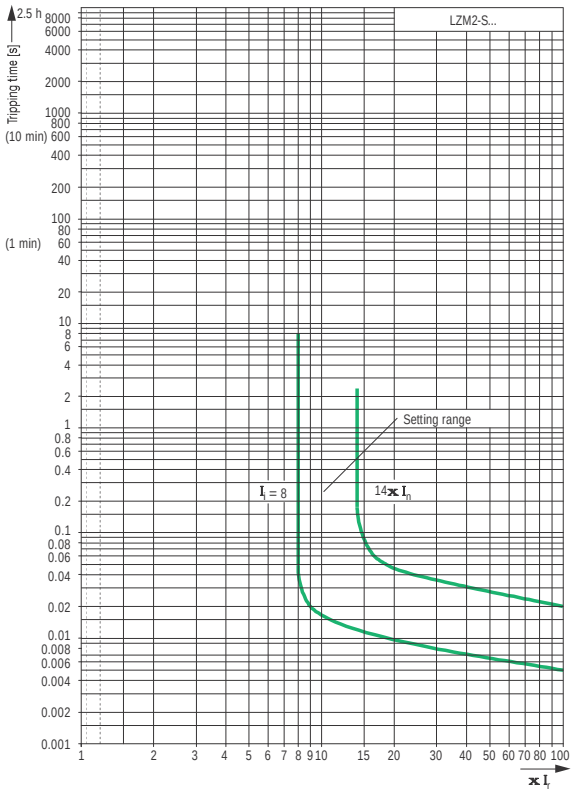

Systems, cable, selectivity and generator protection with LZM2

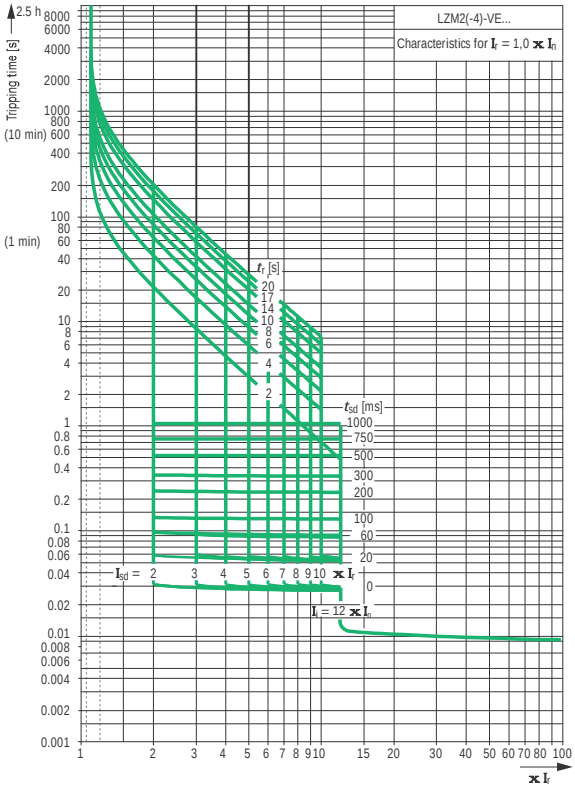

System and line protection with LZM3

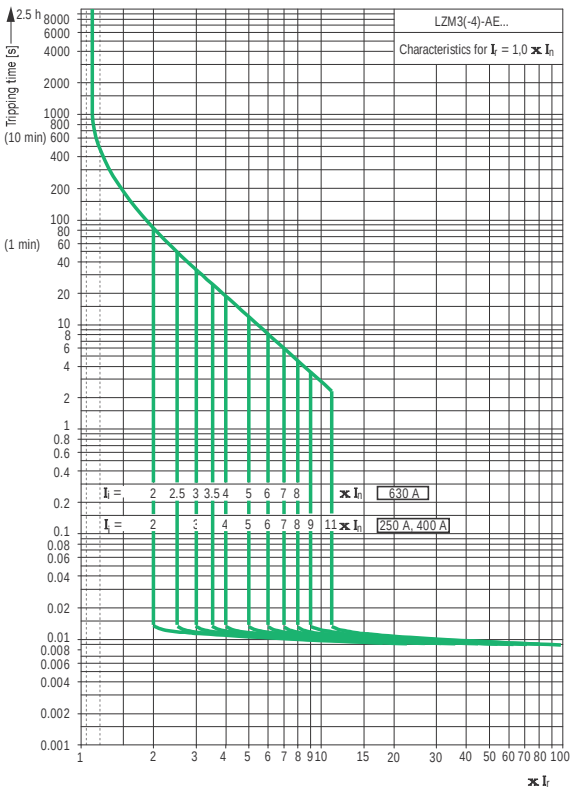

Systems, cable, selectivity and generator protection with LZM3

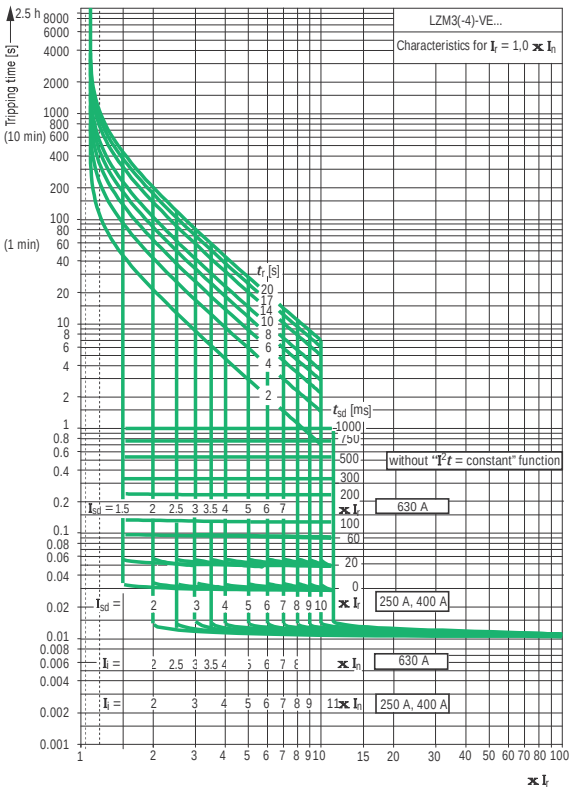

Systems, cable, selectivity and generator protection with LZM3

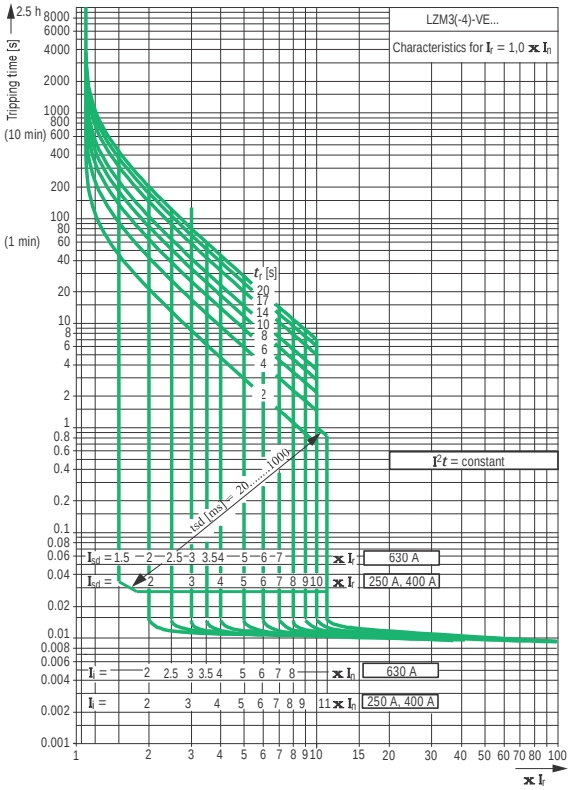

Systems, cable, selectivity and generator protection with NZM4

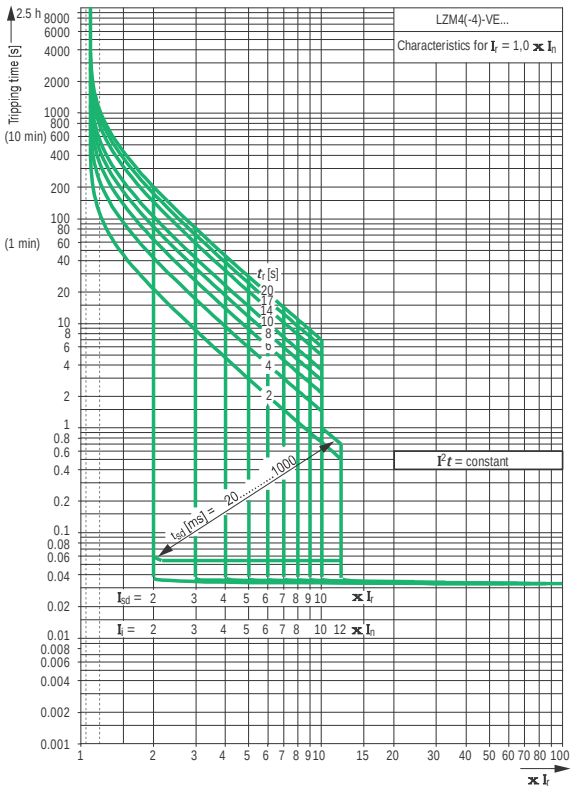

System and line protection with LZM4

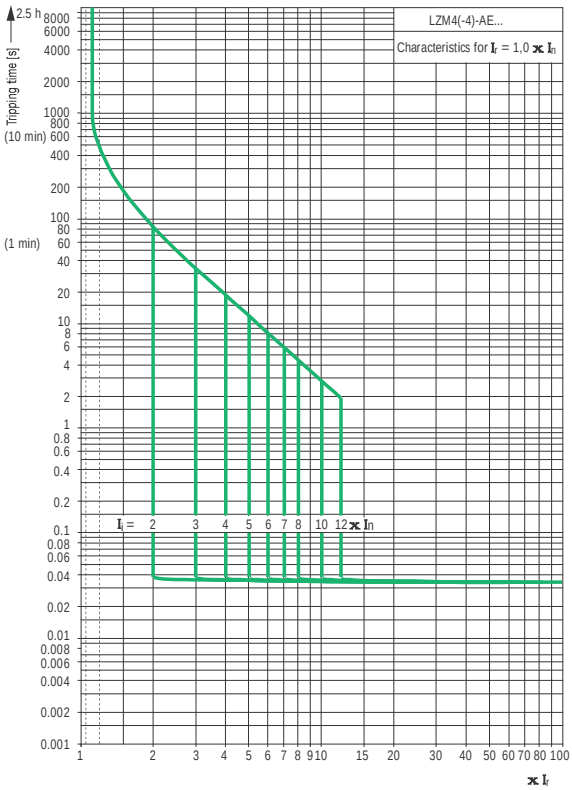

Systems, cable, selectivity and generator protection with LZM4

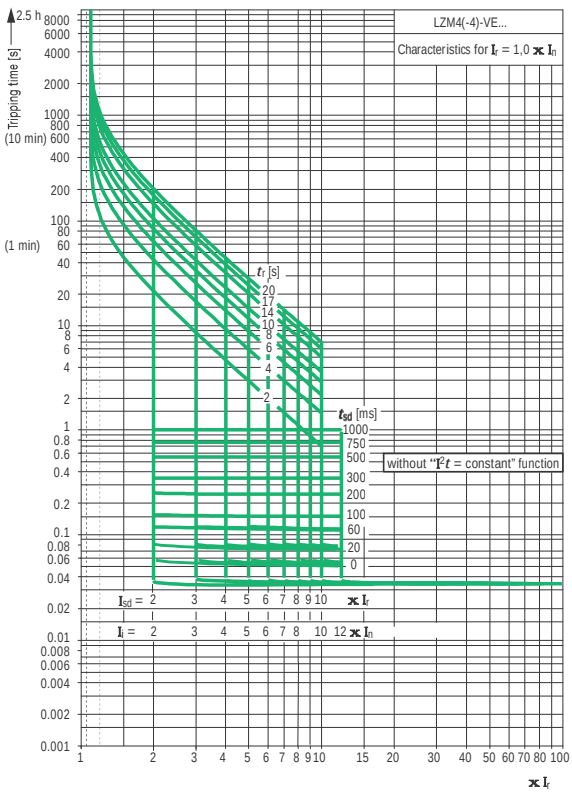

Let-through current $\hat{I}_D$

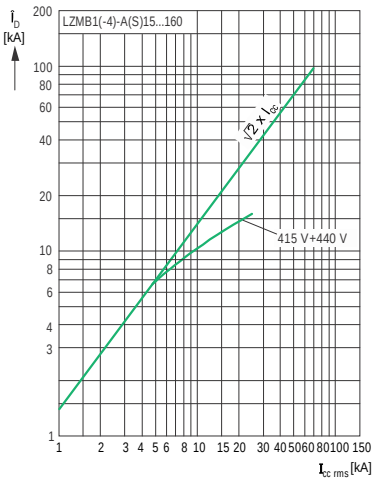

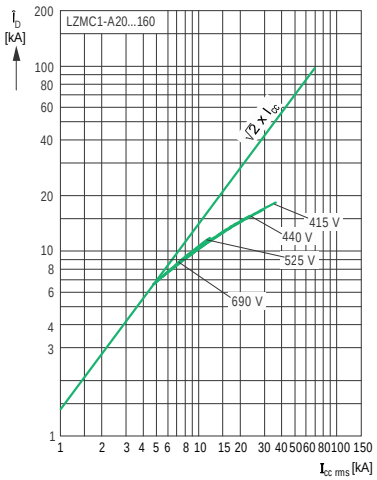

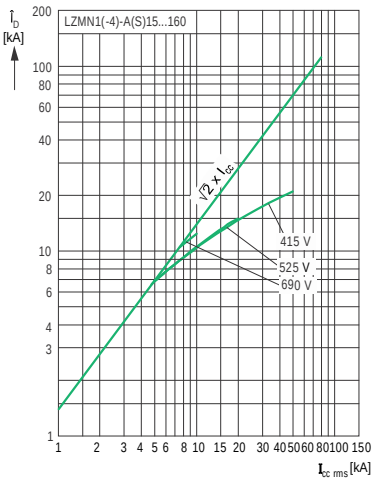

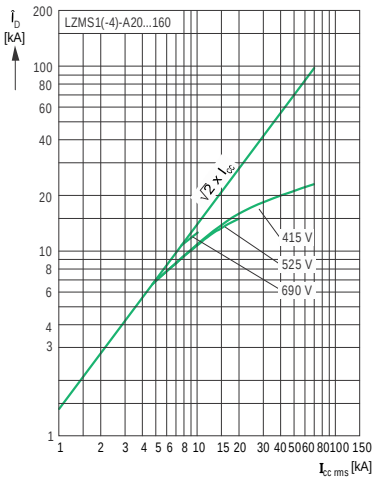

Let-through current I_D

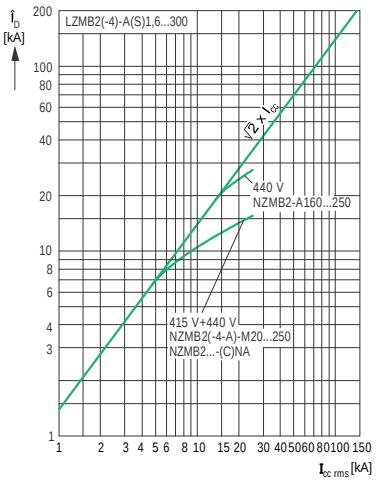

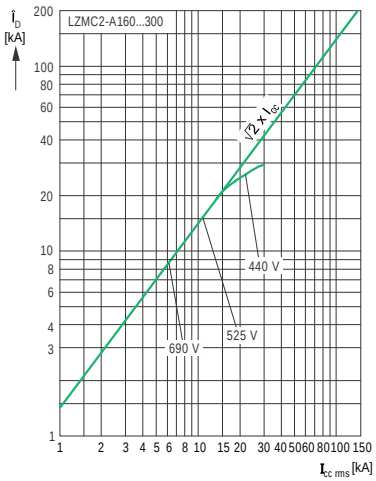

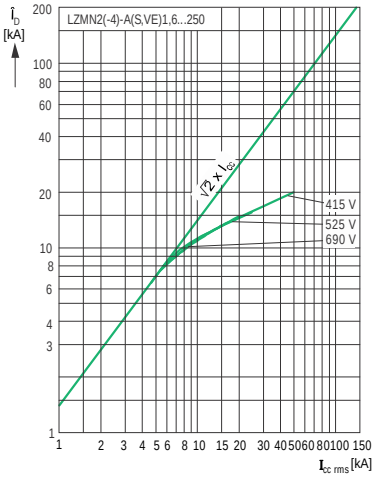

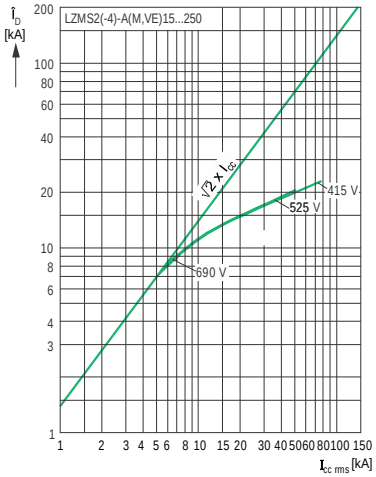

Let-through current $\hat{i}_D$

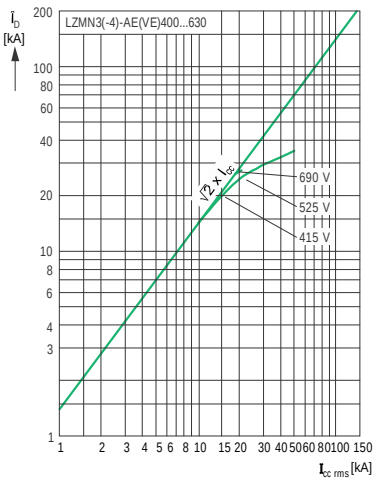

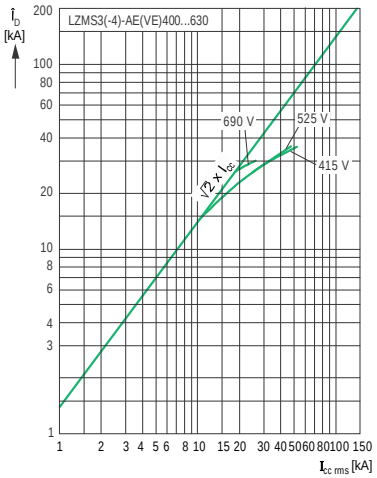

Let-through energy J

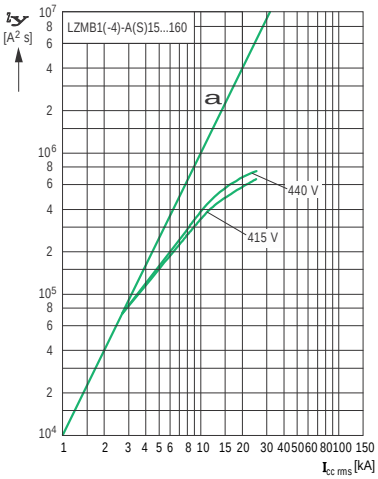

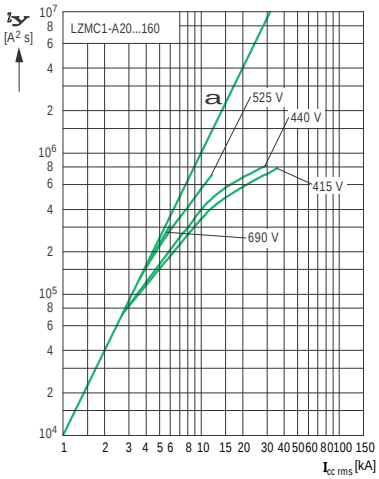

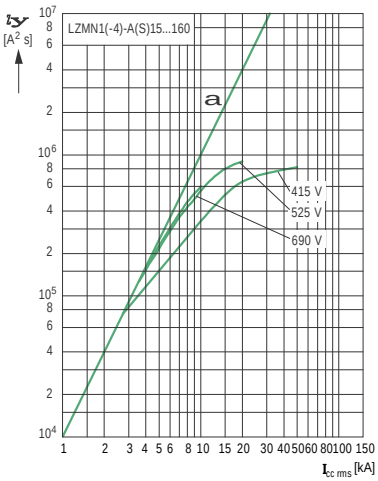

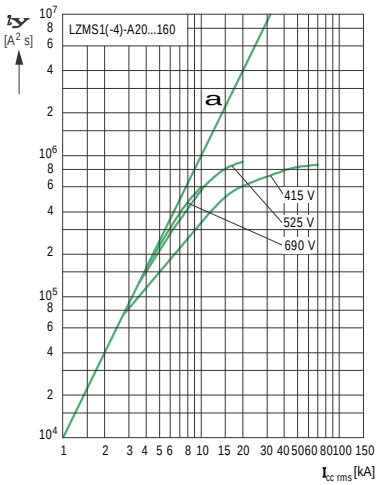

a 1 half-cycle

a 1 half-cycle

Let-through energy J

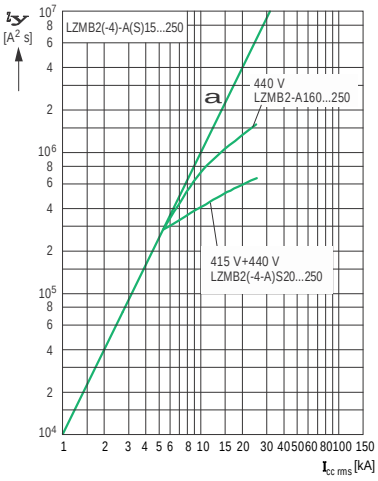

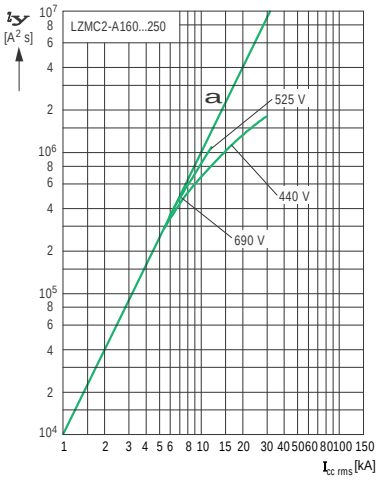

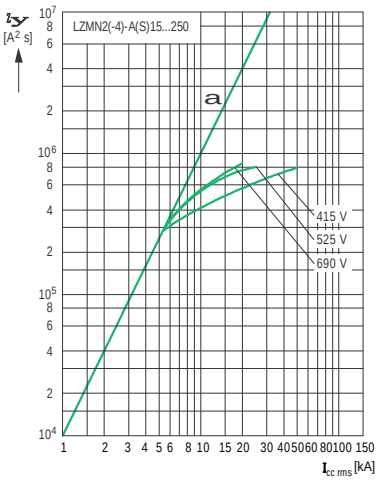

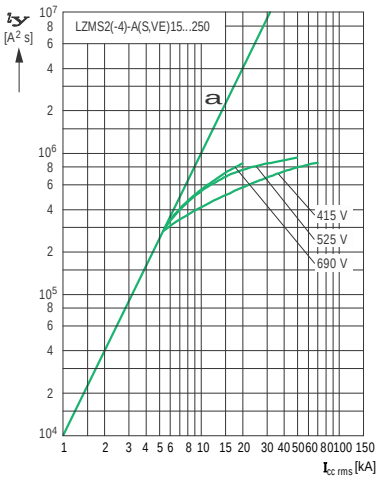

a 1 half-cycle

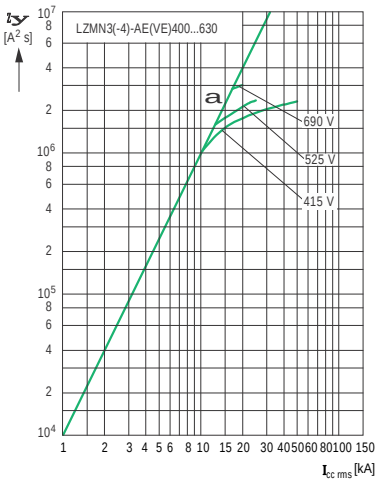

a 1 half-cycle

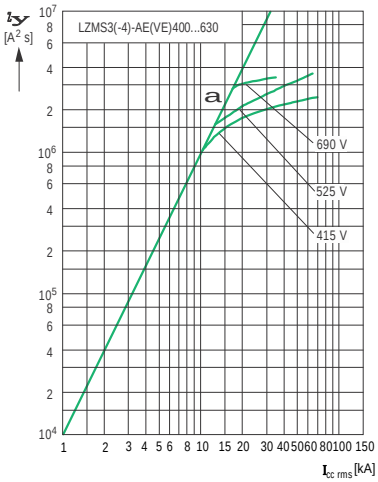

a 1 half-cycle

Frequency response

NZM2-4-XFIA30
30 mA

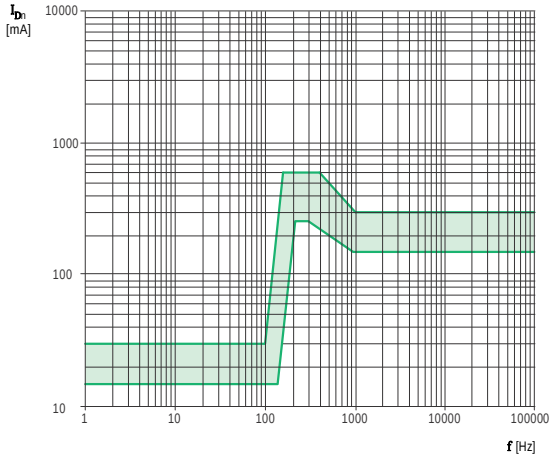

NZM2-4-XFIA
100 mA

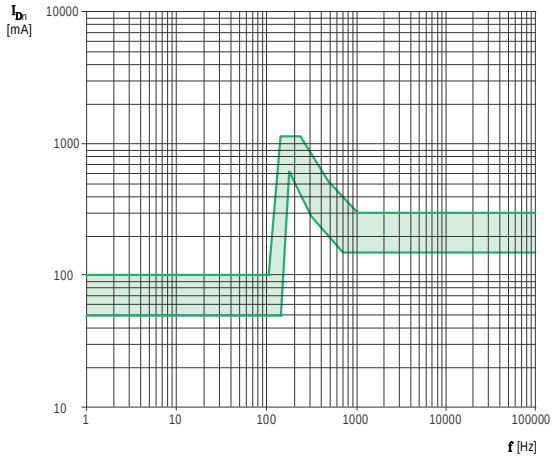

NZM2-4-XFIA
300 mA

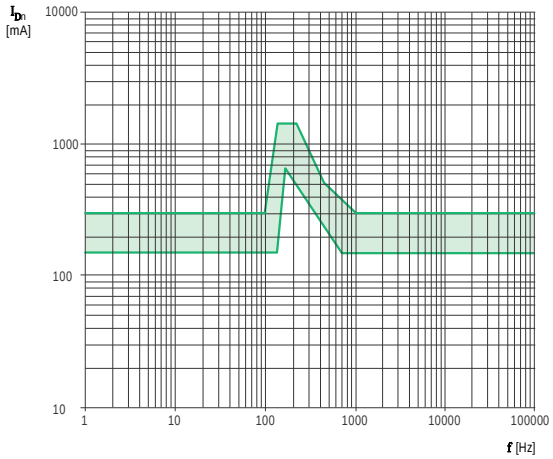

1000 mA

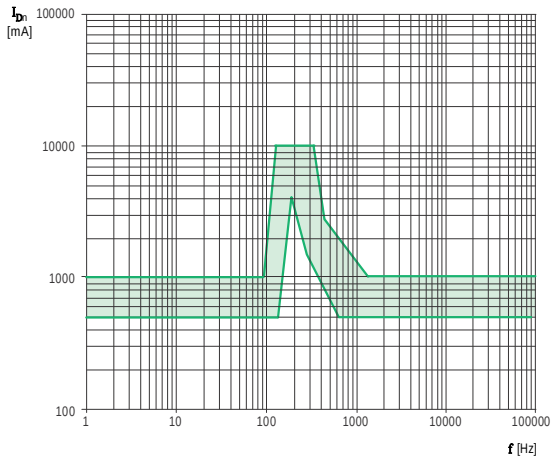

			Rated uninterrupted current max. 160 A			
			LZMB1	LZMC1	LZMN1	LZMS1
General						
Standards			IEC/EN 60947, CCC			
Protection against direct contact			Finger and back of hand proof to VDE 0106 Part 100			
Climatic proofing			Damp heat, constant, according to IEC 60068-2-78 Damp heat, cyclical to IEC 60068-2-30			
Ambient temperature						
Storage		°C	–25…+70			
Operation		°C	–25…+70			
Mechanical shock resistance (IEC/EN 60068-2-27)			20 (half-sinusoidal shock 20 ms)			
Safe isolation to VDE 0106 Part 101 and Part 101/A1						
Between auxiliary contacts and main contacts		V AC	500			
between the auxiliary contacts		V AC	300			
Mounting position			Vertical and 90° in all directions With residual-current release LZM1: Vertical and 90° in all directions			
Direction of incoming supply			As required			
Degree of protection						
Device			In the operating controls area: IP20 (basic degree of protection)			
Enclosures			With insulating surround: IP40, with door coupling rotary handle: IP66			
Terminals			Tunnel terminal: IP10 Phase isolator and strip terminal: IP00			
Circuit-breakers						
Rated impulse withstand voltage U_{imp}						
Main contacts		V	6000	6000	6000	6000
Auxiliary contacts		V	6000	6000	6000	6000
Rated operational voltage	U_e	V AC	690	690	690	690
Overvoltage category/pollution degree			III/3	III/3	III/3	III/3
Rated insulation voltage	U_i	V	690	690	690	690
For use in IT electrical power networks		V	440	690	690	690

Rated uninterrupted current max. 250 A				Rated uninterrupted current max. 630 A			Rated uninterrupted current max. 1600 A	
LZMB2	LZMC2	LZMN2	LZMS2	LZMC3	LZMN3	LZMS3	LZMN4	LZMS4
IEC/EN 60947, CCC								
Finger and back of hand proof to VDE 0106 Part 100								
Damp heat, constant, according to IEC 60068-2-78 Damp heat, cyclical to IEC 60068-2-30								
–25…+70								
–25…+70								
20 (half-sinusoidal shock 20 ms) NZM4: (half-sinusoidal shock 11 ms)								
500								
300								
Vertical and 90° in all directions With plug-in adapter LZM2: vertical, 90° right/left with residual current release, LZM2: vertical and 90° to all directions With withdrawable unit, LZM3: vertical, 90° left, LZM4: vertical, with remote operator: LZM2, LZM3, LZM4: vertical and 90° to all directions								
As required								
In the operating controls area: IP20 (basic degree of protection)								
With insulating surround: IP40, with door coupling rotary handle: IP66								
Tunnel terminal: IP10 Phase isolator and strip terminal: IP00								
8000	8000	8000	8000	8000	8000	8000	8000	8000
6000	6000	6000	6000	6000	6000	6000	6000	6000
440	690	690	690	690	690	690	690	690
III/3	III/3	III/3	III/3	III/3	III/3	III/3	III/3	III/3
690	690	1000	690	690	1000	1000	1000	1000
440	690	690	690	690	690	690	525	525

xEnergy LZM…1, LZM…2, LZM…3, LZM…4 Moeller SK1230-1176GB http://catalog.moeller.net

					Rated uninterrupted current max. 160 A LZMB1	LZMC1	LZMN1	LZMS1
Switching capacity								
Rated short-circuit making capacity								
240 V			I_{cm}	kA	63	121	187	220
400/415 V			I_{cm}	kA	53	76	105	220
440 V			I_{cm}	kA	53	63	74	74
525 V			I_{cm}	kA	–	24	40	40
690 V			I_{cm}	kA	–	14	17	17
Rated short-circuit breaking capacity I_{cn}								
I_{cu} to IEC/EN 60947 operating sequence O-t-CO		240 V 50/60 Hz	I_{cu}	kA	30	55	85	100
		400/415 V 50/60 Hz	I_{cu}	kA	25	36	50	100
		440 V 50/60 Hz	I_{cu}	kA	25	30	35	35
		525 V 50/60 Hz	I_{cu}	kA	–	12	20	20
		690 V 50/60 Hz	I_{cu}	kA	–	8	10	10
I_{cu} to IEC/EN 60947 operating sequence O-t-CO-t-CO		240 V 50/60 Hz	I_{cs}	kA	30	55	85	100
		400/415 V 50/60 Hz	I_{cs}	kA	25	36	50	50
		440 V 50/60 Hz	I_{cs}	kA	18.5	22.5	35	35
		525 V 50/60 Hz	I_{cs}	kA	–	6	10	10
		690 V 50/60 Hz	I_{cs}	kA	–	4	7.5	7.5
Maximum low-voltage h.b.c. fuse[9]				A gG/gL	LZM.1-…20…100: 200 LZM.1-…125, 160: 315			
Utilization category to IEC/EN 60947-2					A	A	A	A
Rated short-time withstand current								
t = 0.3 s			I_{cw}	kA	–	–	–	–
t = 1 s			I_{cw}	kA	–	–	–	–
Rated making and breaking capacity								
Rated operational current	AC-1	400/415 V 50/60 Hz	I_e	A	160	160	160	160
		690 V 50/60 Hz	I_e	A	160	160	160	160
	AC-3	400/415 V 50/60 Hz	I_e	A	160	160	160	160
		690 V 50/60 Hz	I_e	A	160	160	160	160
Lifespan, mechanical			Operations		20000	20000	20000	20000
Maximum operating frequency								
Max. operating frequency				Ops/h	120	120	120	120
Lifespan, electrical								
	AC-1	400/415 V 50/60 Hz	Operations		10000[8]	10000	10000	10000
		690 V 50/60 Hz	Operations		–	7500	7500	7500
	AC-3[4]	400/415 V 50/60 Hz	Operations		–	–	7500	7500
		690 V 50/60 Hz	Operations		–	–	5000	5000
Current heat loss per pole at I_u[6]				W	16.7	16.7	16.7	16.7
Total opening delay at short-circuit				ms	< 10	< 10	< 10	< 10

Notes

[2] For AC-3 rated operational current with LZM4 the following applies: 400 V: max. 650 kW; 690 V: max. 600 kW

[4] For 3-pole system protection circuit-breaker the AC-3 specification is not applicable

[6] For current heat loss per pole the specification refers to the maximum nominal current of the frame size.

[7] For 3-pole system protection circuit-breaker the following applies: 400/415 V 7500 switching operations

[8] Maximum back-up fuse, if the expected short-circuit currents at the installation location exceed the switching capacity of the circuit-breaker.

[9] ≦ 1600 A

http://catalog.moeller.net Moeller SK1230-1176GB LZM…1, LZM…2, LZM…3, LZM…4 xEnergy

					Rated uninterrupted current max. 300 A LZMB2	LZMC2	LZMN2	LZMS2	Rated uninterrupted current max. 630 A LZMC3	LZMN3	LZMS3	Rated uninterrupted current max. 1600 A LZMN4	LZMS4
Switching capacity													
Rated short-circuit making capacity													
240 V			I_{cm}	kA	63	121	187	220	121	187	220	105	275
400/415 V			I_{cm}	kA	53	76	105	154	76	105	154	105	187
440 V			I_{cm}	kA	53	63	74	143	63	74	143	74	187
525 V			I_{cm}	kA	–	24	53	76	24	53	76	53	143
690 V			I_{cm}	kA	–	9	40	53	14	40	53	40	105
Rated short-circuit breaking capacity I_{cn}													
I_{cu} to IEC/EN 60947 operating sequence O-t-CO		240 V 50/60 Hz	I_{cu}	kA	30	55	85	100	55	85	100	50	125
		400/415 V 50/60 Hz	I_{cu}	kA	25	36	50	70	36	50	70	50	85
		440 V 50/60 Hz	I_{cu}	kA	25	30	35	65	30	35	65	35	85
		525 V 50/60 Hz	I_{cu}	kA	–	12	25	35	12	25	35	25	65
		690 V 50/60 Hz	I_{cu}	kA	–	8	20	20	8	20	25	20	50
I_{cu} to IEC/EN 60947 operating sequence O-t-CO-t-CO		240 V 50/60 Hz	I_{cs}	kA	30	55	85	100	55	85	100	37	63
		400/415 V 50/60 Hz	I_{cs}	kA	25	36	50	70	36	50	70	37	43
		440 V 50/60 Hz	I_{cs}	kA	18.5	22.5	35	65	22.5	35	65	26	43
		525 V 50/60 Hz	I_{cs}	kA	–	6	25	36	9	13	18	19	49
		690 V 50/60 Hz	I_{cs}	kA	–	4	5	5	4	5	6	15	37
Maximum low-voltage h.b.c. fuse[9]				A gG/gL	355	355	355	355	LZMN3-…400: 400 LZMN3-…630: 630			LZMN4-…800…1250: 2 × 630 LZMN4-…1600: 2 × 800	
Utilization category to IEC/EN 60947-2					A	A	A	A	A	A	A	B	B
Rated short-time withstand current													
t = 0.3 s			I_{cw}	kA	–	–	1.9	1.9	3.3	3.3	3.3	19.2	19.2
t = 1 s			I_{cw}	kA	–	–	1.9	1.9	3.3	3.3	3.3	19.2	19.2
Rated making and breaking capacity													
Rated operational current	AC-1	400/415 V 50/60 Hz	I_e	A	250	250	250	250	500	630	630	2000	2000
		690 V 50/60 Hz	I_e	A	250	250	250	250	500	630	630	2000	2000
	AC-3	400/415 V 50/60 Hz	I_e	A	250	250	250	250	500	630	630	1600[2]	1600[2]
		690 V 50/60 Hz	I_e	A	250	250	250	250	500	630	630	1600[2]	1600[2]
Lifespan, mechanical			Operations		20000	20000	20000	20000	15000	15000	15000	10000	10000
Maximum operating frequency													
Max. operating frequency				Ops/h	120	120	120	120	60	60	60	60	60
Lifespan, electrical													
	AC-1	400/415 V 50/60 Hz	Operations		10000[8]	10000	10000	10000	5000	5000	5000	3000	3000
		690 V 50/60 Hz	Operations		–	7500	7500	7500	3000	3000	3000	2000	2000
	AC-3[4]	400/415 V 50/60 Hz	Operations		6500[4]	–	6500	6500	2000	2000	2000	2000	2000
		690 V 50/60 Hz	Operations		–	5000	5000	5000	2000	2000	2000	1000	1000
Current heat loss per pole at I_u[6]				W	19	19	19	19	31	40	40	97	97
Total opening delay at short-circuit				ms	< 10	< 10	< 10	< 10	< 10	< 10	< 10	< 25 ≦ 415 V; < 35 > 415 V	< 25 ≦ 415 V; < 35 > 415 V

Device Type	Release type	Response values of the overload release at temperatures deviating from the reference temperatures Temperature compensation coefficient						
		20 °C	30 °C	40 °C	50 °C	60 °C	65 °C	70 °C
Thermomagnetic release (TM)								
System protection		Protection of systems (reference temperature 40 °C)						
LZM...1(-4)-A15…80	TM	1.14	1.07	1	0.93	0.86	0.83	0.79
LZM...1(-4)-A90…125	TM	1.14	1.07	1	0.93	0.86	0.83	0.79
LZM...1(-4)-A160	TM	1.08	1.04	1	0.96	0.92	0.90	0.88
LZM...2(-4)-A15…200	TM	1.04	1.02	1	0.98	0.96	0.95	0.94
LZM...2(-4)-A250	TM	1.04	1.02	1	0.98	0.96	0.95	0.94
LZM...2(-4)-A20…200 + XSV	TM with XSV	1.04	1.02	1	0.98	0.96	0.95	0.94
LZM...2(-4)-A250 + XSV	TM with XSV	1.04	1.02	1	0.98	0.96	0.95	0.94
Short-circuit / motor protection		Motor protection (reference temperature 20 °C)						
LZM...1-S40…80	TM	1	0.98	0.95	0.93	0.90	0.89	0.88
LZM...1-S100	TM	1	0.98	0.95	0.93	0.90	0.89	0.88
LZM...2-S20…200	TM	1	0.98	0.96	0.94	0.92	0.91	0.90
LZM...2-S20…200 + XSV	TM with XSV	1	0.98	0.96	0.94	0.92	0.91	0.90

Notes With temperatures which deviate from the reference temperature, a slight change of the overload protection properties occurs. In order to determine the release time using the tripping characteristics the temperature compensation coefficient in accordance with the table must be c onsidered.
Example: An LZM1-A100 is calibrated for a reference temperature of 40 °C.
What happens when it is operated at an ambient temperature of 60 °C ?
At 60 °C, the temperature compensation coefficient of 0.86 results in a reduced operating current of I_r = 100 A × 0.86 = 86 A. In other words at an ambient temperature of 60 °C the LZ M1-A100 trips as if it were set to 86 A.

Device Type	Release type	Reduction of the rated operational current (derating) under particular ambient conditions (according to IEC 947) Derating coefficient						
		20 °C	30 °C	40 °C	50 °C	60 °C	65 °C	70 °C
Thermomagnetic release (TM)								
System protection		Protection of systems (reference temperature 40 °C)						
LZM...1(-4)-A15…80	TM	1	1	1	1	1	1	1
LZM...1(-4)-A90…125	TM	1	1	1	1	0.86	0.83	0.8
LZM...1(-4)-A160	TM	1	1	1	0.95	0.9	0.85	0.8
LZM...2(-4)-A15…200	TM	1	1	1	1	1	1	1
LZM...2(-4)-A250	TM	1	1	1	1	0.9	0.85	0.8
LZM...2(-4)-A20…200 + XSV	TM with XSV	1	1	1	1	1	1	1
LZM...2(-4)-A250 + XSV	TM with XSV	1	0.97	0.92	0.87	0.81	–	–
Short-circuit / motor protection		Motor protection (reference temperature 20 °C)						
LZM...1-S40…80	TM	1	1	1	1	1	1	1
LZM...1-S100	TM	1	1	1	1	0.86	0.83	0.8
LZM...2-S20…200	TM	1	1	1	1	1	1	1
LZM...2-S20…200 + XSV	TM with XSV	1	1	1	1	1	1	1

Notes The derating coefficient must be considered in accordance with the following table in order to determine the maximum permissibl e current loading at different ambient temperatures.
Example: An LZM2-A250 should be operated at an ambient temperature of 65 °C.
How high is the permissible rated operational current I_e?
At 65 °C the derating coefficient is 0.85, this means I_e = 250 A × 0.85 = 212.5 A.
The LZM2-A250 may be operated at an ambi ent temperature of 65 °C with a maximum I_e = 212.5 A.

Part no.	Weight kg
Circuit-breaker	
LZM...1-...	1.046
LZM...1-4-...	1.325
LZM...2-...	2.345
LZM...2-4-...	3.5
LZM...3-...	6.34
LZM...3-4-...	8.4
LZM...4-...	21
LZM...4-4-...	27

Part no.	Weight kg
Plug-in adapter elements	
+NZM2-XSV	4.7
+NZM2-4-XSV	5.9
Withdrawable unit	
+NZM3-XAV	21
+NZM3-4-XAV	27
+NZM4-XAV	52
+NZM4-4-XAV	65

Device Type	Release type	Reduction of the rated operational current (derating) under particular ambient conditions (according to IEC 947) Derating coefficient						
		20 °C	30 °C	40 °C	50 °C	60 °C	65 °C	70 °C
Electronic release (E)								
System protection								
LZM...3(-4)-AE400...500	E	1	1	1	1	1	1	1
LZM...3(-4)-AE550...630	E	1	1	1	1	0.9	0.85	0.8
LZM...3(-4)-AE400 + XAV	E with XAV	1	1	1	1	1	1	1
LZM...3(-4)-AE630 + XAV	E with XAV	0.96	0.92	0.87	0.83	0.78	0.75	0.73
LZM...4(-4)-AE600...1250	E	1	1	1	1	1	1	1
LZM...4(-4)-AE1600	E	1	1	1	1	0.87	0.85	0.82
LZM...4(-4)-AE800...1250 + XAV	E with XAV	1	1	1	1	1	1	1
LZM...4(-4)-AE1600 + XAV	E with XAV	1	0.98	0.93	0.89	0.85	0.83	0.8
Systems protection, cable protection, selectivity and generator protection								
LZM...3(-4)-VE400...500	E	1	1	1	1	1	1	1
LZM...3(-4)-VE550...630	E	1	1	1	1	0.9	0.85	0.8
LZM...3(-4)-VE400 + XAV	E with XAV	1	1	1	1	1	1	1
LZM...3(-4)-VE630 + XAV	E with XAV	0.96	0.92	0.87	0.83	0.78	0.75	0.73
LZM...4(-4)-VE600...1250	E	1	1	1	1	1	1	1
LZM...4(-4)-VE1600	E	1	1	1	1	0.87	0.85	0.82
LZM...4(-4)-VE630...1250 + XAV	E with XAV	1	1	1	1	1	1	1
LZM...4(-4)-VE1600 + XAV	E with XAV	1	0.98	0.93	0.89	0.85	0.83	0.8

Notes The derating coefficient must be considered in accordance with the following table in order to determine the maximum permissible current loading at different ambient temperatures.

Example: An LZM3-VE630 should be operated at an ambient temperature of 65 °C.
How high is the permissible rated operational current I_e?
At 65 °C the derating coefficient is 0.85, this means $I_e = 630\ A \times 0.85 = 535.5\ A$.
The LZM3-VE630 may be operated at an ambient temperature of 65 °C with a maximum $I_e = 535.5$ A.

LZM up to 250 A with thermomagnetic release (3- and 4-pole)

	Fixed mounting				Fixed mounting			
	LZM1-				LZM2-			
	A...		S...		A...		S...	
I_n [A]	P [W]	R [µOhm]	P [W]	R [µOhm]	P [W]	R [µOhm]	P [W]	R [µOhm]
1.2	–	–	–	–	–	–	–	–
1.6	–	–	–	–	–	–	–	–
2	–	–	–	–	–	–	–	–
2.4	–	–	–	–	–	–	–	–
3	–	–	–	–	–	–	–	–
5	–	–	–	–	–	–	–	–
8	–	–	–	–	–	–	–	–
12	–	–	–	–	–	–	–	–
15	–	–	–	–	–	–	–	–
18	–	–	–	–	–	–	–	–
20	9.8	8180	–	–	5.1	4250	5.1	4250
25	8.8	4680	–	–	8	4250	8	4250
26	–	–	–	–	–	–	–	–
30	–	–	–	–	–	–	–	–
32	9.1	3030	–	–	10	3140	10	3140
33	–	–	–	–	–	–	–	–
35	–	–	–	–	–	–	–	–
40	11	2220	13.5	2810	13	2800	13	2800
45	–	–	–	–	–	–	–	–
50	13.5	1760	15	1880	18	2270	18	2270
60	–	–	–	–	–	–	–	–
63	14	1190	16.7	1250	20	1700	20	1700
70	–	–	–	–	–	–	–	–
80	15.5	850	21.1	1085	22	1070	22	1070
90	–	–	–	–	–	–	–	–
100	24	730	25	795	28	855	28	855
110	–	–	–	–	–	–	–	–
125	38	570	–	–	29	589	29	589
150	–	–	–	–	–	–	–	–
160	50	460	–	–	40	427	40	427
175	–	–	–	–	–	–	–	–
200	–	–	–	–	48	332	48	332
225	–	–	–	–	–	–	–	–
250	–	–	–	–	57	310	–	–

Note: The values stated in the table apply for 3- and 4-pole fixed mounted devices with an equal load distribution.
On 4-pole devices the current in the N-conductor is equal to zero.
The total resistive load is the measured value for a 3-pole or a 4-pole switch.
The total heat dissipation is the value measured at I_n, 50/60Hz for a 3-pole or 4-pole switch.
The heat dissipation can be calculated with the formula: $P = 3 \times R \times I^2$

LZM up to 1600 A with electronic release (3- and 4-pole)

Fixed mounting LZM2-	Supplementary Plug-in units	Fixed mounting LZM3	Supplementary Withdrawable units	Fixed mounting LZM4	Supplemementary Withdrawable units
R [µOhm]	R [µOhm]	R [µOhm]	R [µOhm]	R [µOhm]	R [µOhm]
275	100	100	70	37	10

Note: The values stated in the table apply for 3- and 4-pole devices with an equal load distribution.
On 4-pole devices the current in the N-conductor is equal to zero.
The total resistive load is the measured value for a 3-pole or a 4-pole switch
(independent of I_n and the type of release).
The total resistive load for a plug-in or withdrawable switch results from:
the resistive value for fixed mounted + resi stive value for plug-in or withdrawable.
The heat dissipation can be calculated with the formula: $P = 3 \times R \times I^2$

					LZM1 160 A	I_n 1) A	LZM2 250 A	I_n 1) A
Terminal capacities								
Standard equipment					Box terminal		Screw terminal	
Accessories					Screw connection Tunnel terminal Connection on rear		Box terminal Tunnel terminal Connection on rear	
Rated power of coil								
Box terminal	Solid			mm²	1 × (10 – 16) 2 × (6 – 16)	160	1 × (4 – 16) 2 × (4 – 16)	250
	Stranded			mm²	1 × (25–70) 2 × 25		1 × (25 – 185) 2 × (25 – 70)	250
Tunnel terminal	Solid			mm²	1 × 16	160	1 × 16	250
	Stranded	Single hole		mm²	1 × (25 – 95)		1 × (25 – 185)	
		Double hole fitting		mm²	–	–	–	–
		4-hole		mm²	–	–	–	–
Bolt terminal and rear-side connection								
Direct on the switch	Solid			mm²	1 × (10 – 16) 2 × (6 – 16)	160	1 × (4 – 16) 2 × (4 – 16)	250
	Stranded			mm²	1 × (25 – 70)3) 2 × 25		1 × (25 – 185) 2 × (25 – 70)	
Module plate	Single hole		min.	mm²	–	–	–	–
			max.	mm²	–	–	–	–
Module plate	Double hole		min.	mm²	–	–	–	–
			max.	mm²	–	–	–	–
Connection width extension				mm²				
Al conductors, Al cable								
Tunnel terminal	Solid			mm²	1 × 16	160	1 × 16	250
	Stranded	Single hole		mm²	1 × (25 – 95)		1 × (25 – 185)2)	
		Double hole fitting		mm²	–	–	–	–
		4-hole		mm²	–	–	–	–
Bolt terminal and rear-side connection								
Direct on the switch	Solid			mm²	1 × (10 – 16) 2 × (10 – 16)	160	1 × (10 – 16) 2 × (10 – 16)	250
	Stranded			mm²	1 × (25 – 35) 2 × (25 – 35)		1 × (25 – 50) 2 × (25 – 50)	
Module plate	Single hole		min.	mm²	–	–	–	–
	Single hole		max.	mm²	–	–	–	–
Module plate	Double hole			mm²	–	–	–	–
Connection width extension				mm²				
Cu strip (number of segments x width x segment thickness)								
Box terminal			min.	mm	2 × 9 × 0.8	160	2 × 9 × 0.8	250
			max.	mm	9 × 9 × 0.8		10 × 16 × 0.8	
Flat conductor terminal			min.	mm				
			max.	mm				
Module plate	Single hole			mm	–	–	–	–
Bolt terminal and rear-side connection								
Flat copper strip, with holes			min.	mm			2 × 16 × 0.8	250
Flat copper strip, with holes			max.	mm			10 × 16 × 0.8	
Connection width extension				mm²	–	–	–	–
Copper busbar (width × thickness)								
Bolt terminal and rear-side connection								
Screw connection					M6		M8	
Direct on the switch			min.	mm	12 × 5	160	16 × 5	250
			max.	mm	16 × 5		20 × 5	
Module plate	Single hole		min.	mm	–	–	–	–
			max.	mm	–	–	–	–
Module plate	Double hole			mm	–	–	–	–
Connection width extension			min.	mm	–	–	–	–
			max.	mm	–	–	–	–

Notes

1) The rated currents I_n have been determined conform to IEC/EN 60947 (switchgear standard) and generally relate to the max. defined cross-sections and are intended for the purpose of orientation. The engineering standards which apply in each case must be observed.
2) depending on the cable manufacturer up to 240 mm² can be connected.
3) depending on the cable manufacturer up to 95 mm² can be connected.

LZM3 630 A	I_n 1) A	LZM4 1600 A	I_n 1) A
Screw terminal		Screw terminal	
Box terminal Tunnel terminal Connection on rear		Tunnel terminal Connection on rear Strip terminal	
2 × 16	500		
1 × (35 – 240) 2 × (25 – 120)			
1 × (25 – 185)	350		
1 × (50 – 240) 2 × (50 – 240)	630 2 x 185	–	–
–	–	4 × (50 – 240)	1400
1 × 16 2 × 16	630 2 x 185		
1 × (25 – 240) 2 × (25 – 240)		1 × (120 … 185) 4 × (50 … 185)	1250
–	–	1 × (120 – 300)	1000
–	–	2 × (95 – 300)	
–	–	2 × (95 – 185)	1400
–	–	4 × (35 – 185)	
2 × 300	630 2 × 185	4 × 300 6 × (95 – 240)	1600 4 × 240
1 × 16	350	–	–
1 × (25 – 185)2)		–	–
1 × (50 – 240) 2 × (50 – 240)	630	–	–
–	–	4 × (50 – 240)	1400
1 × 16 2 × (10 – 16)	400	–	–
1 × (25 – 120) 2 × (25 – 120)		–	–
–	–	1 × (185 – 240)	pleaes inquire
–	–	2 × (70 – 185)	pleaes inquire
–	–	4 × 50	–
		2 × 240 6 × (70 – 240)	pleaes inquire
6 × 16 × 0.8	630	–	–
10 × 24 × 1.0 + 5 × 24 × 1.0 (2 ×) 8 × 24 × 1.0		–	–
		6 × 16 × 0.8	1100
		(2 ×) 10 × 32 × 1.0	
–	–	(2 ×) 10 × 50 × 1.0	1250 (2 ×) 10 × 40 × 1.0
6 × 16 × 0.8	630	(2 ×) 10 × 50 × 1.0	1600
10 × 32 × 1.0 + 5 × 32 × 1.0		(2 ×) 10 × 50 × 1.0	
(2 ×) 10 × 50 × 1.0		(2 ×) 10 × 80 × 1.0	1600 2 × (10 × 50 × 1.0)
M10		M10	
20 × 5	630	25 × 5	1600
30 × 10 +30 × 5		2 × (50 × 10) 2 × (80× 10)	2000
–	–	25 × 5	1250 2 × (40 × 10)
–	–	2 × (50 × 10)	
–	–	2 × (50 × 10)	1500
–	630 10 × 40	60 × 10	1600 2 × (50 × 10)
2 × (10 × 50)		2 × (80 × 10)	

		at AC = 50/60 Hz		M22-K...	NZM-XHIV	NZM-XHI
Auxiliary contacts						
Rated operational voltage						
AC		U_e	V AC	500	500	500
DC		U_e	V DC	220	220	220
Conventional thermal current		$I_{th} = I_e$	A	4	4	4
Rated operational current						
AC–15	115 V	I_e	A	4	4	4
	230 V	I_e	A	4	4	4
	400 V	I_e	A	2	2	2
	500 V	I_e	A	1	1	1
DC-13	24 V	I_e	A	3	3	3
	42 V	I_e	A	1.7	1.5	–
	60 V	I_e	A	1.2	0.8	1.2
	110 V	I_e	A	0.8	0.5	0.5
	220 V	I_e	A	0.3	0.2	0.2
Short-circuit protection						
max. fuse			A gG/gL	10	10	10
Max. miniature circuit-breaker			A	PKZM0-10/FAZ-B6	FAZ-B6	FAZ-B6
Early-make time compared to the main contacts during switch on and off (switching times with manual operation)			ms		LZM1: approx. 20 LZM2: approx. 20 LZM3: approx. 20 LZM4: approx. 90 With LZM4/N(S)4 the HIV does **not** feature early break.	
Terminal capacities						
Solid or flexible conductor with ferrule			mm²	1 × (0.75 – 2.5) 2 × (0.75 – 2.5)	1 × (0.75 – 2.5) 2 × (0.75 – 2.5)	1 × (0.75 – 2.5) 2 × (0.75 – 2.5)
			AWG	1 × (18 – 14) 2 × (18 – 14)	1 × (18 – 14) 2 × (18 – 14)	1 × (18 – 14) 2 × (18 – 14)

Maximum equipment and position of the internal accessories

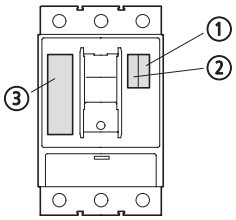

	③ -XHIV(2S) or -XA or -XU	② HIA	① HIN
LZM1	1	1	1
LZM2	1	1	2
LZM3	1	1	3
LZM4	1	2	3

Contacts per slot with HIA and HIN
1 N/O
1 N/C
2 N/O
2 N/C

N/O = normally open contact
N/C = normally closed contact

Time differences ON-OFF

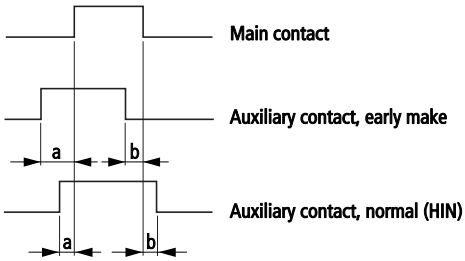

	Time difference a (ms)						Time difference b (ms)					
	Manual operation			Motor operators			Manual operation			Motor operators		
	HIV	HIN		HIV	HIN		HIV	HIN		HIV	HIN	
		K10	K01		K10	K01		K10	K01		K10	K01
LZM1	20[2)]	0	2.5	–	–	–	20[2)]	0	2.5	–	–	–
LZM2	20[2)]	3.5	6.5	Not permissible	2.5	4.5	20[2)]	3	4.5	Not permissible	3	4
LZM3	20[2)]	4	8	Not permissible	2	4	20[2)]	3.5	8	Not permissible	3	6.5
LZM4	90[2)]	7	11	Not permissible	on request	on request	0[1)2)]	12	15	Not permissible	on request	on request

Notes
[1)] With LZM4/N(S)4 the HIV does **not** feature early break.
[2)] Minimum value, as it is dependent on the switching speed

			NZM1(2/3)-XU...	NZM4-XU…
Undervoltage release				
Rated control voltage				
Alternating voltage at 50/60 Hz	U_s	V AC	24…600	24…600
DC	U_s	V DC	12…250	12…250
Operating range				
Drop-out voltage		× U_s	0.35 – 0.7	0.35 – 0.7
Pick-up voltage		× U_s	0.85 – 1.1	0.85 – 1.1
Power consumption				
AC				
Pick-up AC		VA	1.5	3.6
Sealing AC		VA	1.5	3.6
DC				
Pick-up DC		W	0.8	2.5
Sealing DC		W	0.8	2.5
Max. opening delay (response time until the main circuits open)		ms	19	23
Minimum command time		ms	10 – 15	10 … 15
Terminal capacities				
Solid or flexible conductor with ferrule		mm²	1 × (0.75 … 2.5) 2 × (0.75 … 2.5)	1 × (0.75 … 2.5) 2 × (0.75 … 2.5)
		AWG	1 × (18 … 14) 2 × (18 … 14)	1 × (18 … 14) 2 × (18 … 14)

			UVU-NZM
Undervoltage releases, off-delayed			
Rated operational voltage			
Alternating voltage at 50/60 Hz	U_e	V AC	24, 220 – 550
DC	U_e	V DC	24
Inrush current (peak value)	I_e	mA	< 500
Power consumption		VA	50
Delay time	t_{sd}	ms	70 – 4000
With additional external capacitor, 90.000 µF ≧ 35 V		s	To 16
With additional external capacitor, 30.000 µF ≧ 35 V		s	To 8
Terminal capacities			
Solid or flexible conductor with ferrule		mm²	1 × (0.5 – 2.5) 2 × (0.5 – 1.5)

			NZM1(2/3)-XA...	NZM4-XA...	NZM2/3-XA...-MNS	NZM4-XA…-MNS
Shunt release						
Rated control voltage						
AC	U_s	V AC	12…440	12…440	230	230
DC	U_s	V DC	12…440	12…440		
Frequency range		Hz	0 – 400	0 – 400	50/60	50/60
Operating range						
AC		× U_s	0.7…1.1	0.7…1.1	0.1…1.1	0.1…1.1
DC		× U_s	0.7…1.1	0.7…1.1		
Power consumption						
Pick-up AC/DC		VA/W	2.5	2.5	–	–
Sealing AC/DC		VA/W	2.5	2.5	–	–
Maximum current consumption at 110% U_s (230 V 50 Hz)		A	–	–	0.5	1
Max. opening delay (response time until the main circuits open)		ms	20	22	20	22
Duty factor		ms	∞	∞	1000 ms	1000 ms
Minimum command time		ms	10 … 15	10 … 15	10 … 15	10 … 15
Terminal capacities						
Solid or flexible conductor with ferrule		mm²	1 × (0.75 … 2.5) 2 × (0.75 … 2.5)	1 × (0.75 … 2.5) 2 × (0.75 … 2.5)	1 × (0.75 … 2.5) 2 × (0.75 … 2.5)	1 × (0.75 … 2.5) 2 × (0.75 … 2.5)
		AWG	1 × (18 … 14) 2 × (18 … 14)	1 × (18 … 14) 2 × (18 … 14)	1 × (18 … 14) 2 × (18 … 14)	1 × (18 … 14) 2 × (18 … 14)

			NZM-XCM
Capacitor unit for shunt release			
Rated operational voltage	U_e	V AC	230
Rated operational current	I_e	mA	< 10
Inrush current (peak value)	I_e	A	3
Terminal capacities			
Solid or flexible conductor with ferrule		mm²	1 × (0.5 – 2.5) 2 × (0.5 – 1.5)
		AWG	1 × (20 – 14) 2 × (20 – 16)

				NZM2-XR...	NZM3-XR...	NZM4-XR…
Remote operator						
Rated control voltage						
AC		U_s	V AC	110…440	110…440	110…440
DC		U_s	V DC	24…250	24…250	24…250
Operating range						
AC		U_s		0.85…1.1	0.85…1.1	0.85…1.1
DC		U_s		0.85…1.1	0.85…1.1	0.85…1.1
Motor rating						
AC	110 … 130 V AC		VA	350	350	350
	208 … 240 V AC		VA	350	350	350
	380 … 440 V AC		VA	350	350	350
DC	24 … 30 V DC		W	250	250	250
	110 … 130 V DC		W	250	250	250
	220 … 250 V DC		W	250	250	250
Rated power of coil						
AC	110 … 130 V AC		VA	270	270	270
	208 … 240 V AC		VA	270	270	270
	380 V … 440 V AC		VA	270	270	270
DC	24 … 30 V DC		W	210	210	210
	100 … 130 V DC		W	210	210	210
	220 … 250 V DC		W	210	210	210
Total make time			ms	60	80	100
Total opening delay			ms	300	1000	3000
Minimum signal duration						
with switch on			ms	30	30	30
with switch off			ms	150	250	500
Lifespan, mechanical		Operations		20000	15000	10000
Maximum operating frequency			Ops./h	120	60	20
Terminal capacities						
Solid or flexible conductor with ferrule			mm²	0.75 … 2.5	0.75 … 2.5	0.75 … 2.5
			AWG	18 … 14	18 … 14	18 … 14

xEnergy PFR-…

			PFR-003	PFR-03	PFR-5
Electrical					
Standards			IEC/EN 60947-2, IEC 755, IEC 1008, IEC 1009		
Sensitivity			Pulse current sensitive, type A		
Rated control voltage	U_s	V AC	230 ±20 % (50/60 Hz)		
Motor rating	P_e	W	3	3	3
Rated fault currents	$I_{\Delta n}$	mA	0.03	0.3	0.03, 0.1, 0.3, 0.5, 1, 3, 5
Delay time	t_v	s	0.02 (non-delayed)	0.02 (non-delayed)	0.02, 0.1, 0.3, 0.5, 1, 3, 5
Relay contacts			1 integrated changeover contact	1 integrated changeover contact	1 integrated changeover contact
Rated voltage of the relay contact		V AC/DC	250/100	250/100	250/100
Rated current of the relay contact		A	6	6	6
Fault current warning		Hz	–	–	0.5 = 25% – 50% $I_{\Delta n}$ 1 = 50% – 75% $I_{\Delta n}$ 2 = 75% – 100% $I_{\Delta n}$
Mechanical					
Standard front dimension		mm	45	45	45
Device height		mm	85	85	85
Device width		mm	45	45	45
Mounting			Snap fixing, top-hat rail DIN 46277, IEC/EN 60715		
Terminals top and bottom			Box terminals		
Terminal protection			Finger/back-of-hand proof to BGV A2, VDE 106 part 100		
Terminal capacities		mm^2	2 × 0.75 – 2.5 solid, 2 × 0.75 – 1.5 flexible/with ferrules		
Sealability				–	yes

			NZM1(-4)-XFI30R	NZM1(-4)-XFI300R	NZM1(-4)-XFIR	NZM1(-4)-XFI30U
Electrical						
Standards			IEC/EN 60947-2	IEC/EN 60947-2	IEC/EN 60947-2	IEC/EN 60947-2
Sensitivity			Pulse current sensitive according to core-balance principle			
Min. operating voltage						
or detection of fault currents type A/AC			80 V (dependent on mains voltage)	80 V (dependent on mains voltage)	80 V (dependent on mains voltage)	80 V (dependent on mains voltage)
or detection of fault currents type B						
Suitability for the application			In three- and single-phase systems			In single-phase
Rated operational voltage	U_e	V AC	200…415 (3~)	200…415 (3~)	200…415 (3~)	200…415 (3~)
Rated frequency	f	Hz	50/60	50/60	50/60	50/60
Number of poles			3/4	3/4	3/4	3/4
Rated current range	I_n	A	15…125	15…125	15…125	15…100
Rated fault currents	$I_{\Delta n}$	A	0.03	0.3	0.03…0.1…0.3…0.5…1…3	0.03
Detection range of the fault current			50/60 Hz	50/60 Hz	50/60 Hz	50/60 Hz
Rated ultimate short-circuit making capacity and -rated ultimate short-circuit breaking capacity	$I_{\Delta m}$	A	$= I_{CU}$	$= I_{CU}$	$= I_{CU}$	$= I_{CU}$
Fault current warning			$\geqq 0.3 \times I_{\Delta n}$	$\geqq 0.3 \times I_{\Delta n}$	$\geqq 0.3 \times I_{\Delta n}$	$\geqq 0.3 \times I_{\Delta n}$
Mechanical shock resistance (IEC 60068-2-27)			20 (half-sinusoidal shock 20 ms)			
Lifespan, mechanical (50 % with fault current)	Operations		20000	20000	20000	20000
Mechanical						
Standard front dimension		mm	45	45	45	45
Mounting			on the right side	sidewise on the right	Bottom	Bottom
Mounting position			Vertical and 90° in all directions			
Supply			LZM1 from above	LZM1 from above	LZM1 from above	LZM1 from above
Degree of protection			IP20 in the operating component area			
Ambient temperature		°C	–5…+40	–5…+40	–5…+40	–5…+40
Sealability					yes, setting buttons	
Terminal capacity						
Flexible without ferrule		mm²	such as LZM1 standard terminal			
flexible with ferrules		mm²	such as LZM1 standard terminal			

NZM1(-4)-XFI300U	NZM1(-4)-XFIU	+NZM2-4-XFI30	+NZM2-4-XFI	+NZM2-4-XFIA30	+NZM2-4-XFIA
IEC/EN 60947-2	IEC/EN 60947-2	IEC/EN 60947-2	IEC/EN 60947-2	IEC/EN 60947-2	IEC/EN 60947-2
Pulse current sensitive according to core-balance principle		Pulse current sensitive according to core-balance principle	Pulse current sensitive according to core-balance principle	Sensitive to AC/DC (type B)	Sensitive to AC/DC (type B)
80 V (dependent on mains voltage)	80 V (dependent on mains voltage)	independent of mains voltage	independent of mains voltage	0 V independent of mains voltage	0 V independent of mains voltage
				50 V (dependent on mains power)	50 V (dependent on mains voltage)
In single-phase		In three- and single-phase systems			
200…415 (3~)	200…415 (3~)	280…690	280…690	50…400 (3~)	50…400 (3~)
50/60	50/60	50/60	50/60	50/60	50/60
3/4	3/4	4	4	4-pole	4-pole
15…100	15…100	15…250	15…250	15…250	15…250
0.3	0.03…0.1…0.3…0.5…1…3	0.03	0.1…0.3…1…3	0.03	0.1…0.3…1
50/60 Hz	50/60 Hz	50/60 Hz	50/60 Hz	with AC voltage: 0 – 100 kHz with pulsed DC voltage: 50 Hz	with AC voltage: 0 – 100 kHz with pulsed DC voltage: 50 Hz
$= I_{CU}$	$= I_{CU}$	$= I_{CU}$	$= I_{CU}$	$= I_{CU}$	$= I_{CU}$
$\geqq 0.3 \times I_{\Delta n}$	$\geqq 0.3 \times I_{\Delta n}$	–	–	–	–
20 (half-sinusoidal shock 20 ms)					
20000	20000	$\geqq$ 2000	$\geqq$ 2000	$\geqq$ 2000	$\geqq$ 2000
45	45	96	96	96	96
Bottom	Bottom	Bottom	Bottom	Bottom	Bottom
Vertical and 90° in all directions					
LZM1 from above	LZM1 from above	As required	As required	Bottom	Bottom
IP20 in the operating component area					
–5…+40	–5…+40	–25…+70	–25…+70	–25…+70	–25…+70
	yes, setting buttons			yes, setting buttons	yes, setting buttons
such as LZM1 standard terminal		with LZM2 standard connection			
such as LZM1 standard terminal		with LZM2 standard connection			

Circuit-breaker
3 pole
LZMB1
LZMC1
LZMN1
LZMS1

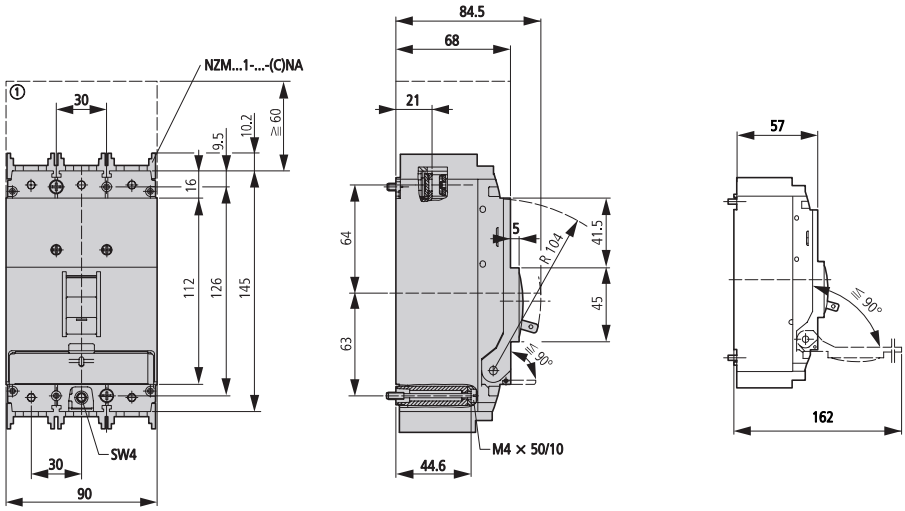

① Blow out area, minimum clearance to other parts ≧ 60 mm

Circuit-breaker
4 pole
LZMB1-4
LZMC1-4
LZMN1-4
LZMH1-4

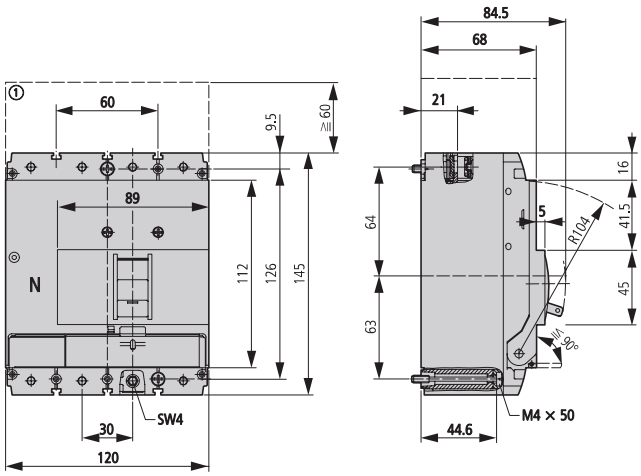

① Blow out area, minimum clearance to other parts ≧ 60 mm

Covers
NZM1(-4)-XKSA
Screw connection
NZM1(-4)-XKS
IP2X protection against contact with a finger for shroud
NZM1(-4)-XIPA
Screw connection

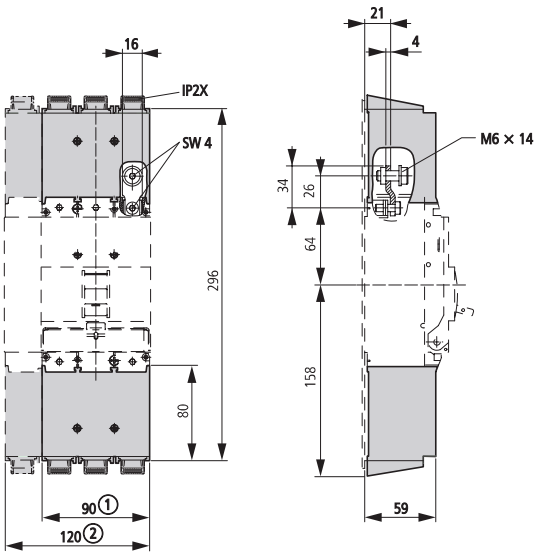

① 3 pole
② 4 pole

Tunnel terminal

NZM1(-4)-XKA

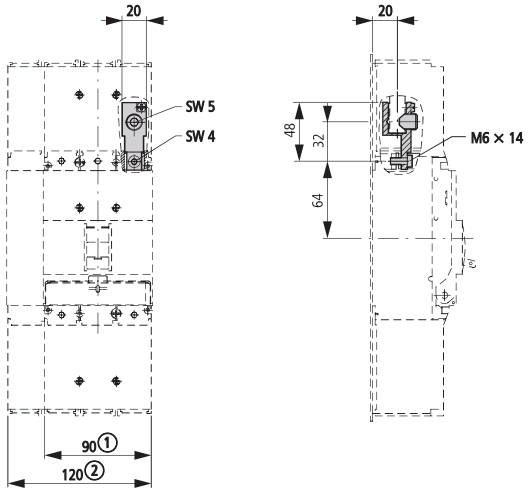

① 3 pole
② 4 pole

Connection on rear

NZM1(4)-XKR

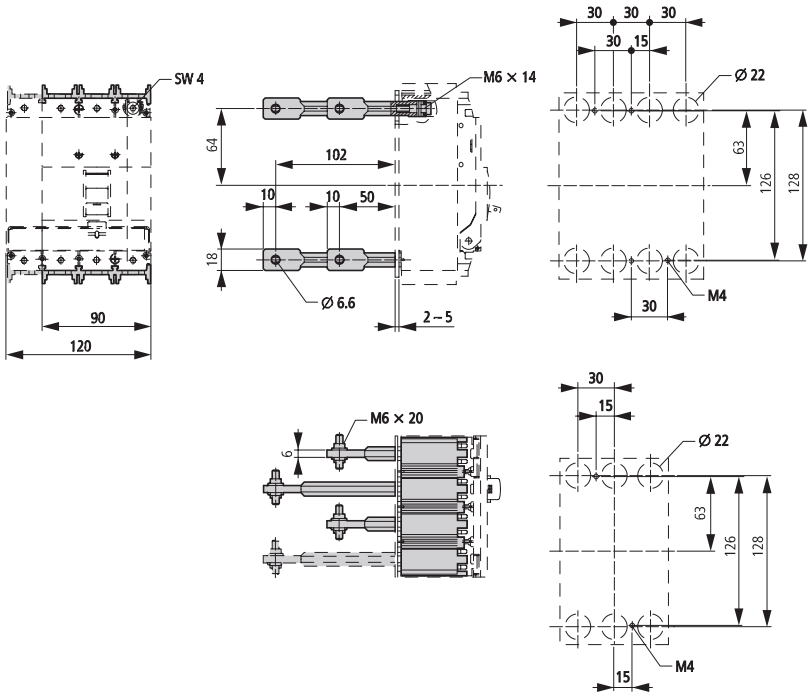

Control circuit terminal

NZM1-XIPK, NZM-XSTK

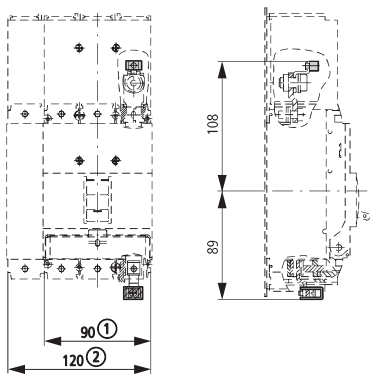

① 3 pole
② 4 pole

IP2X protection against contact with a finger

NZM1(-4)-XIPK

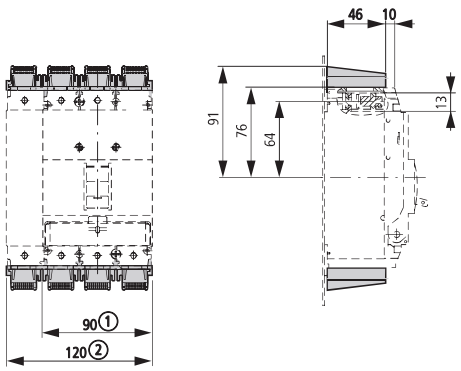

Rotary drive

Rotary handle on circuit-breaker

NZM1-XDV
NZM1-XDVR

NZM1-XDTV

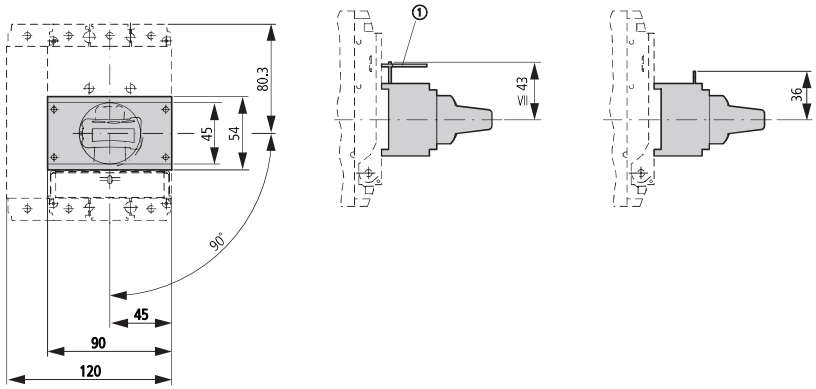

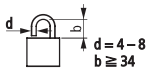

① Up to 3 padlocks

Door coupling rotary handle

NZM1-XTVD(V)(R)

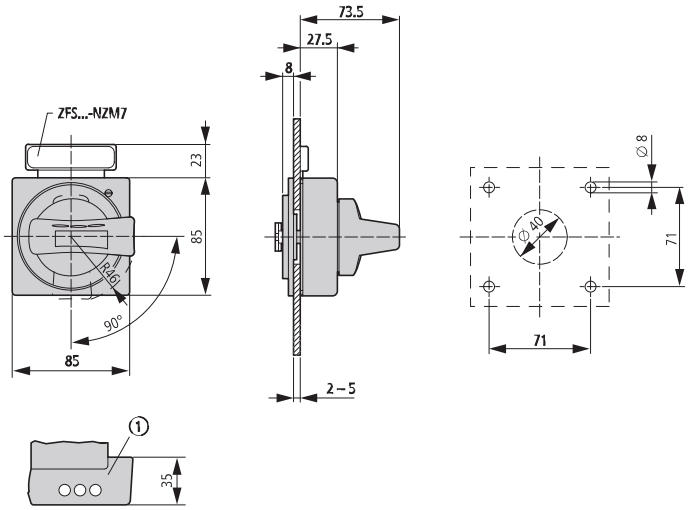

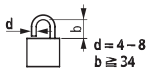

① Up to 3 padlocks

Door coupling rotary handle with extension shaft

NZM1-XTVD(V)(R)
NZM1/2-XV4(6)

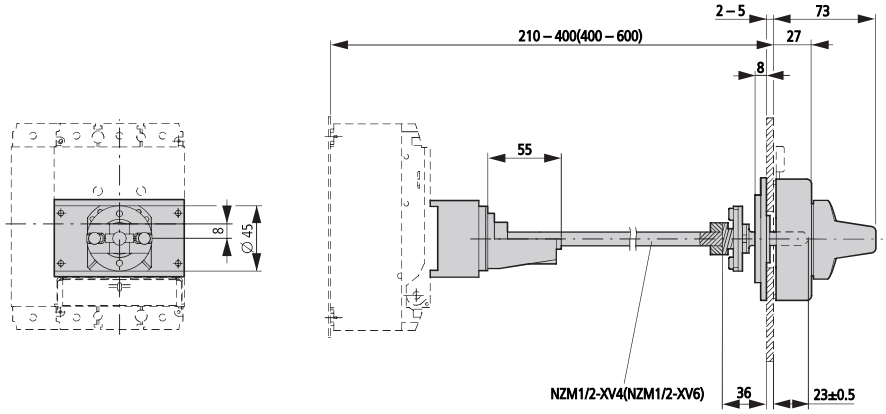

NZM1-XTVD(V)(R)-60

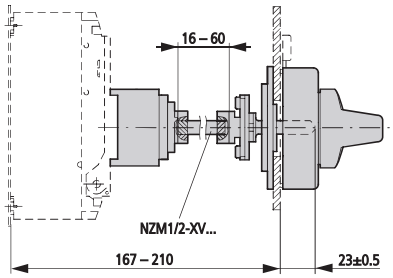

NZM1-XTVD(V)(R)-0

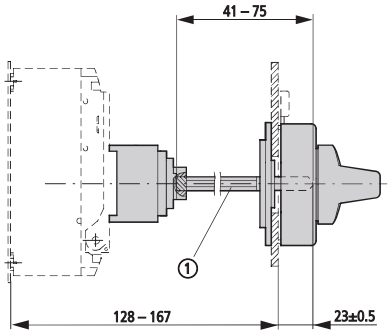

1 Special tip

Minimum door coupling rotary handle clearance from door pivot point

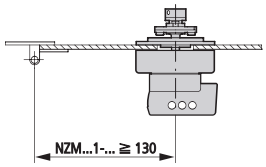

Main switch assembly kit for side panel mounting

NZM1-XS(R)-L

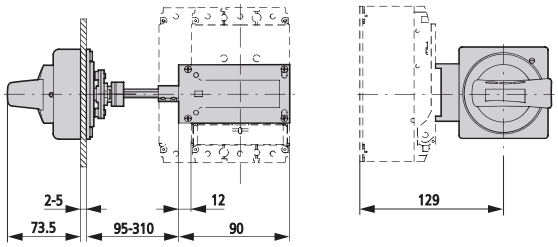

NZM1-XS(R)-R

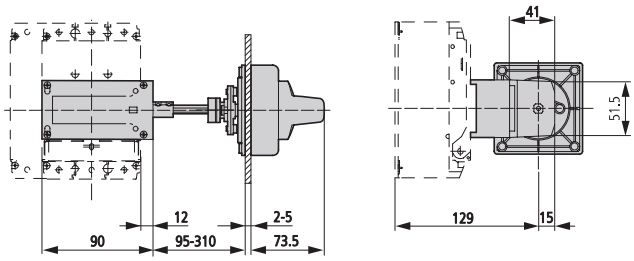

Main switch assembly kit for side panel mounting with mounting bracket

NZM1-XS(R)M-L

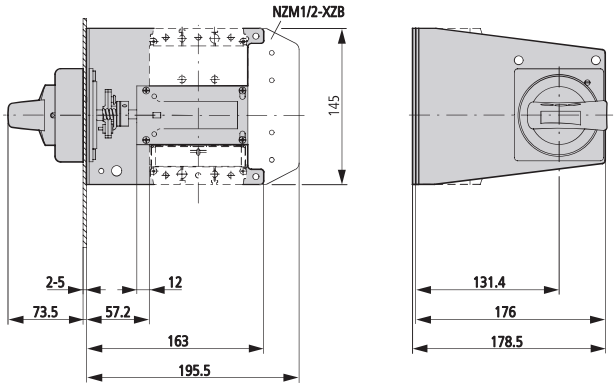

NZM1-XS(R)M-R

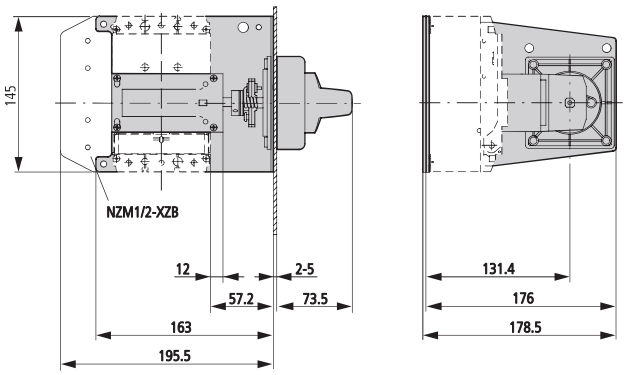

Undervoltage release
Shunt release
Early-make auxiliary contacts

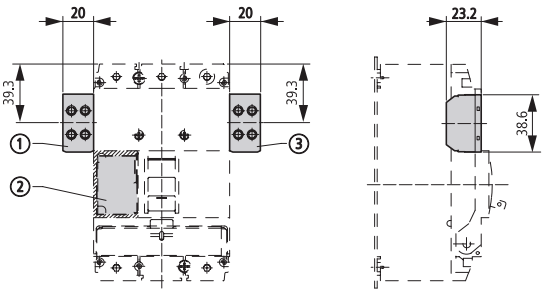

①
NZM1-XA(HIV)
NZM1-XU(HIV)(20)
NZM1-XHIV
②
NZM1-XA(HIV)(L)
NZM1-XU(V)(HIV)(L)(20)
NZM1-XHIV(L)
③
NZM1-XHIVR

Spacers

NZM1/2-XAB

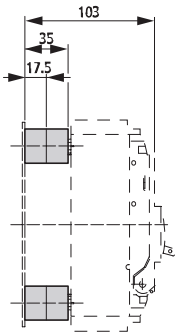

Clip plate

NZM1-XC35

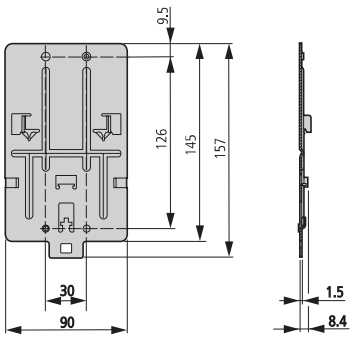

Insulating surrounds

NZM1-XBR

① Mounting aperture

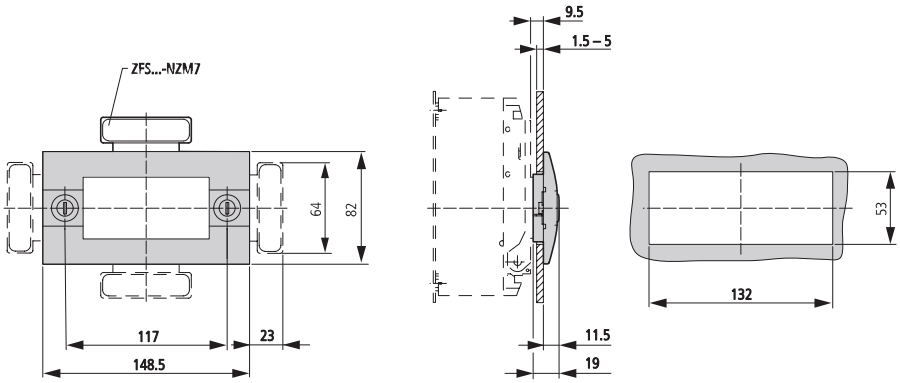

Rotary handle on switch with door interlock

NZM1-XDTV(R)

① Mounting aperture

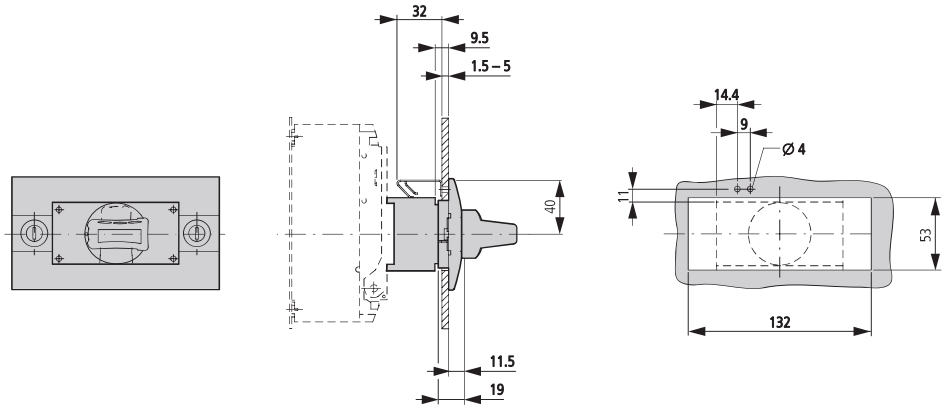

Rear drive

NZM1-XRAV(R)

NZM1-4-XRAV(R)

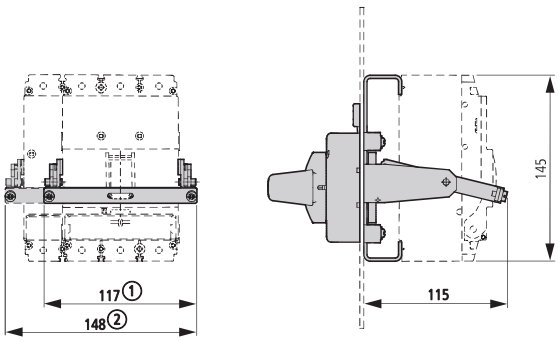

① NZM1-XRAV(R)
② NZM1-4-XRAV(R)

Toggle lever locking device

NZM-XKAV

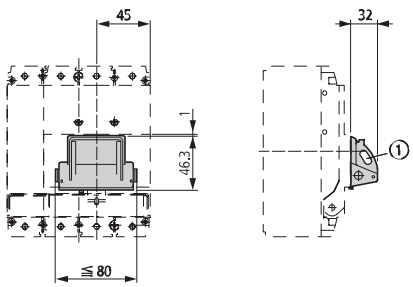

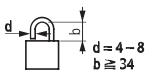

① Up to 3 padlocks

Mechanical interlock

NZM1-XMV + NZM1-XDV(R)

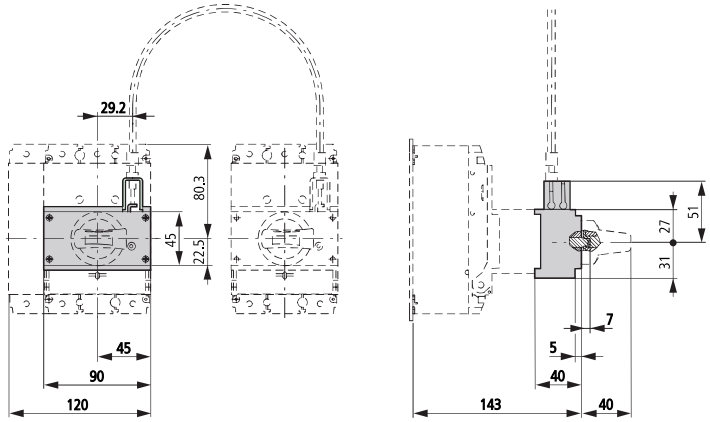

NZM1-XMV + NZM1-XTVD(V)(R)

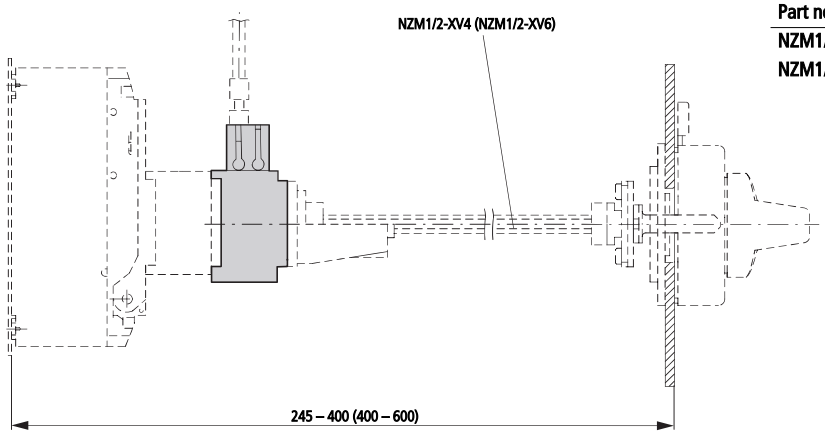

Part no.	x
NZM1/2-XV4	245 – 400
NZM1/2-XV6	400 – 600

NZM1-XMV + NZM1-XTVD(V)(R)-60

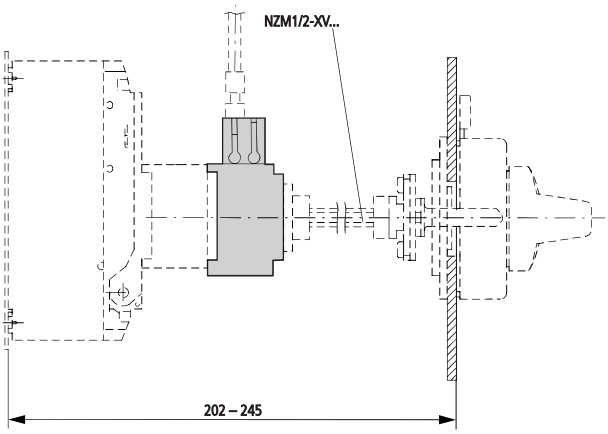

NZM1-XMV + NZM1-XTVD(V)(R)-0

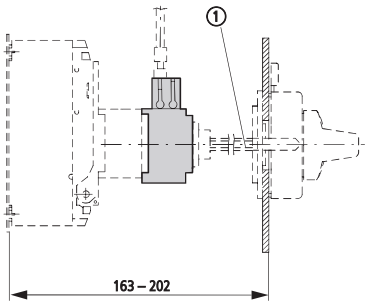

① Special tip

Insulated enclosures

NZM1-XCIK5-T...

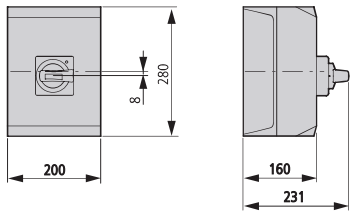

NZM1-XCI23-T...

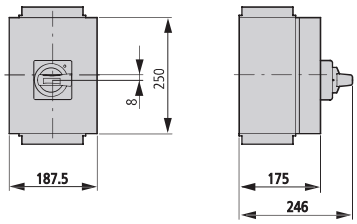

NZM1-XCI43-T...

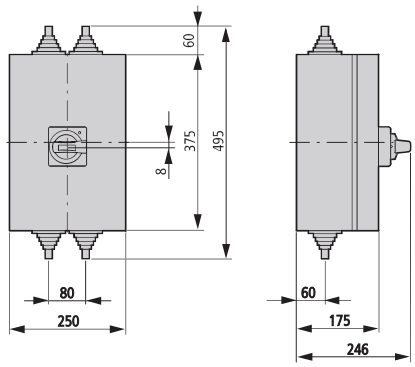

NZM1-XCI43/2-T...

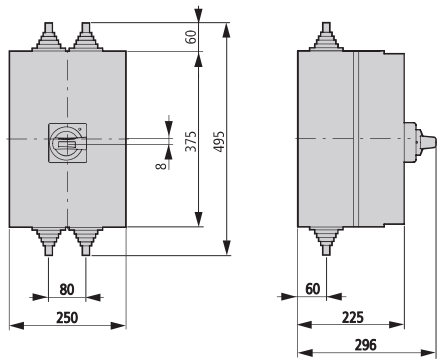

Component adapter

NZM1-XAD160

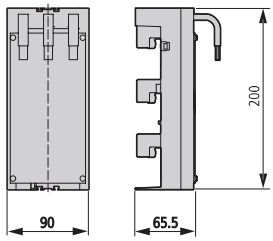

Residual-current relay

PFR-003
PFR-03
PFR-5

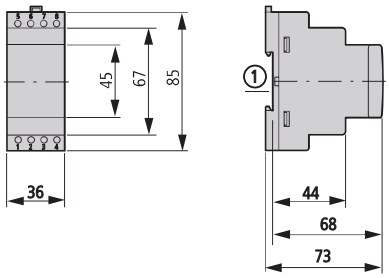

Current transformer

PFR-W-20…30

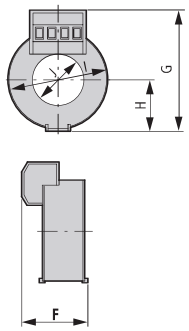

PFR-W-35...210

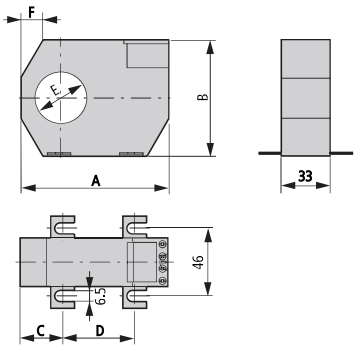

Part no.	A	B	C	D	E	F
PFR-W-35	100	79	26	48.5	35	35
PFR-W-70	130	110	32	66	70	52
PFR-W-105	170	146	38	94	105	72
PFR-W-140	220	196	48.5	123	140	97
PFR-W-210	299	284	69	161	210	141

	F	G	H	I	J
PFR-W-20	32	60	24	46	21
PFR-W-30	32	70	30	59	30

Fixing clip

PFR-WC

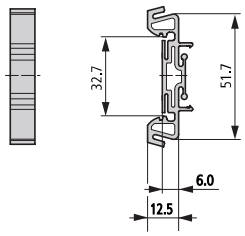

PFR-WMA

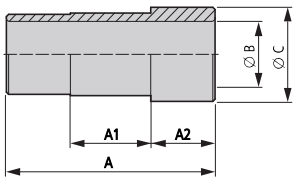

Part no.	A	ØB	ØC	A1	A2
PFR-WMA-35	91	28	40	35	28
PFR-WMA-70	105	62	75	35	35
PFR-WMA-105	153	98	110	35	60
PFR-WMA-140	153	133	145	35	60
PFR-WMA-210	153	203	215	35	60

Residual-current release

NZM1(-4)-XFI...R

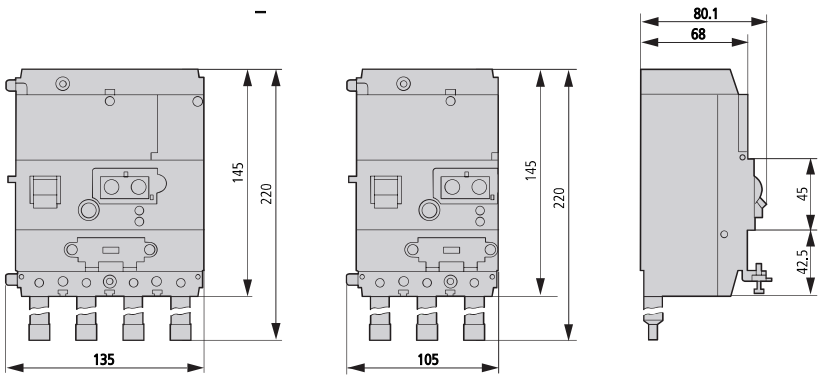

NZM1(-4)-XFI...U

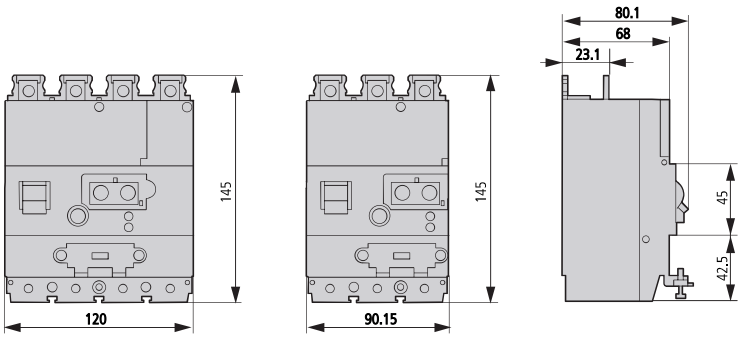

Circuit-breaker
3 pole
LZMB2
LZMC2
LZMN2
LZMS2

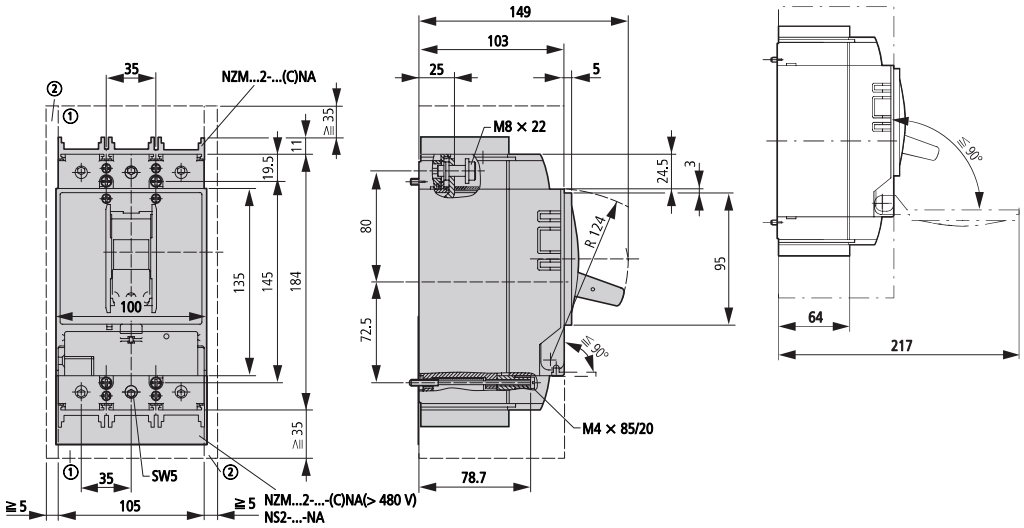

① Blow out area, minimum distance to other parts ≧ 35 mm
② Minimum distance to adjacent parts ≧ 5 mm

Circuit-breaker
4 pole
LZMB2-4
LZMC2-4
LZMN2-4
LZMS2-4

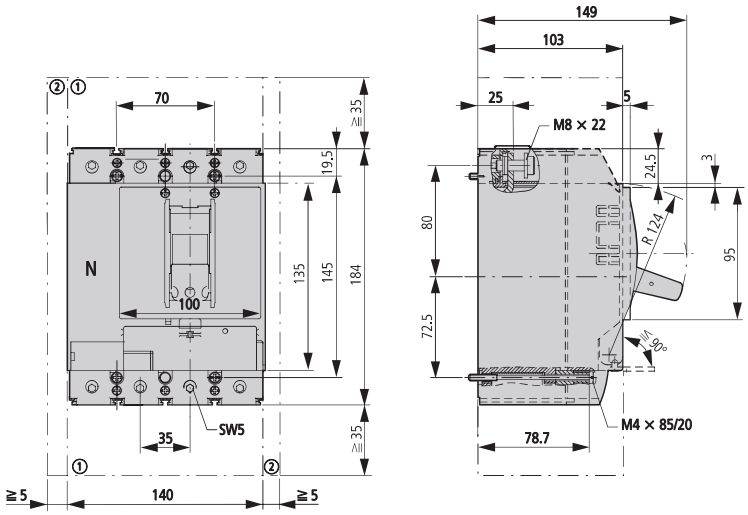

① Blow out area, minimum distance to other parts ≧ 35 mm
② Minimum distance to adjacent parts ≧ 5 mm

Box terminal
(+)NZM2(-4)-...-XKC(O)(U)
IP2X protection against contact with a finger
NZM2(-4)-XIPK

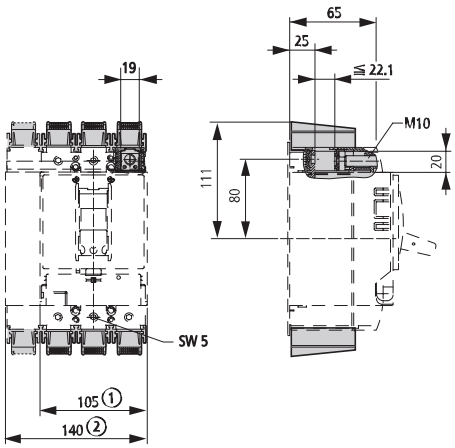

Tunnel terminal
NZM2(-4)-XKA

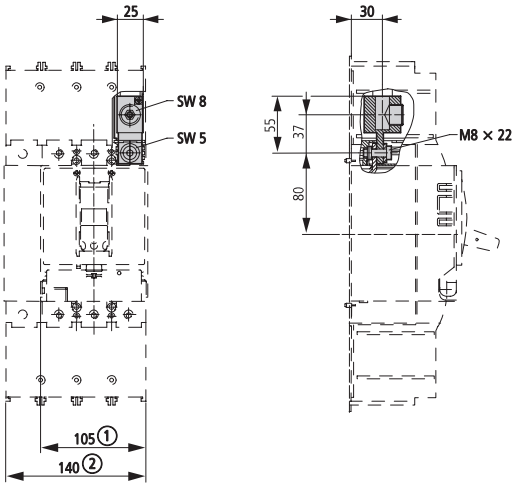

① 3 pole
② 4 pole

Covers
NZM2(-4)-XKSA
Cable lug
NZM2-XKS185
IP2X protection against contact with a finger for shroud
NZM2(-4)-XIPA

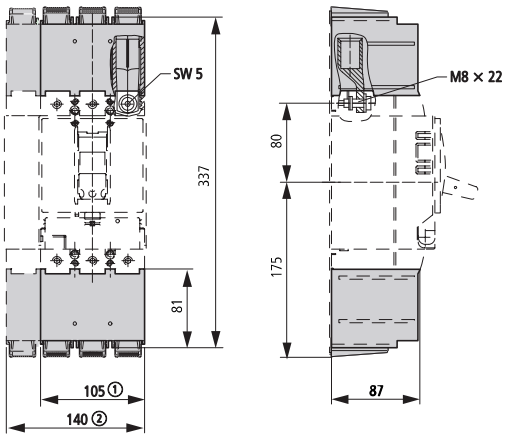

Control circuit terminal
NZM2-XSTS
NZM-XSTK

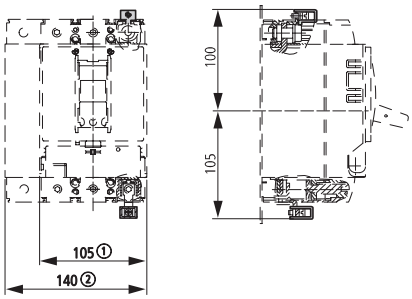

① 3 pole
② 4 pole

Connection on rear
(+)NZM2(-4)-XKR(O)(U)

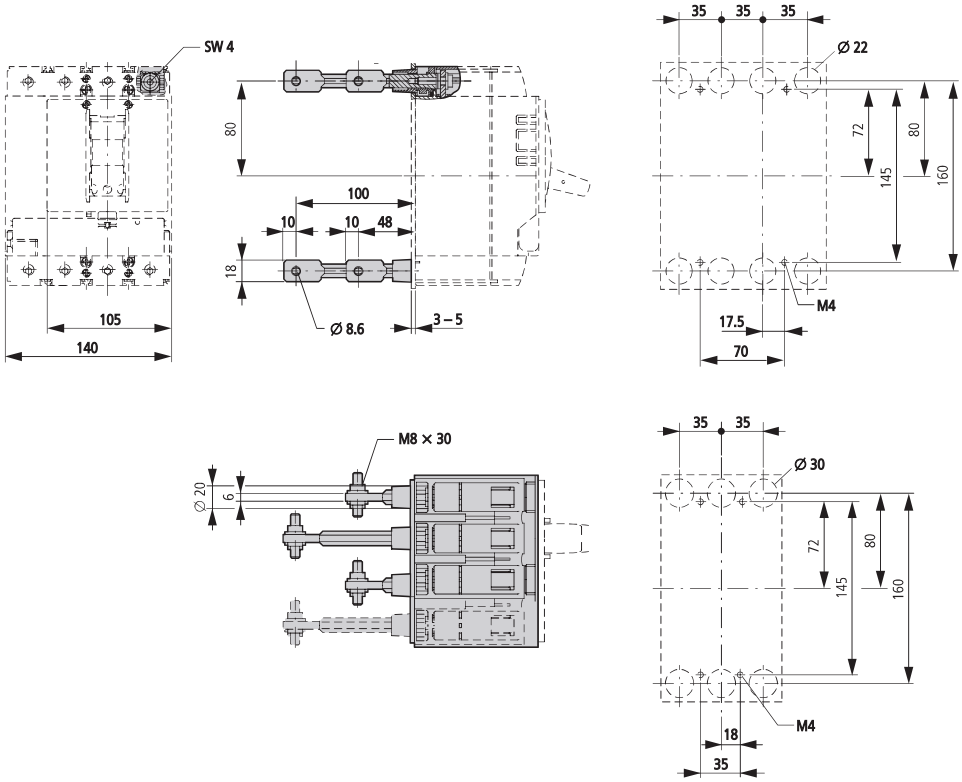

Rotary drive
Rotary handle on circuit-breaker

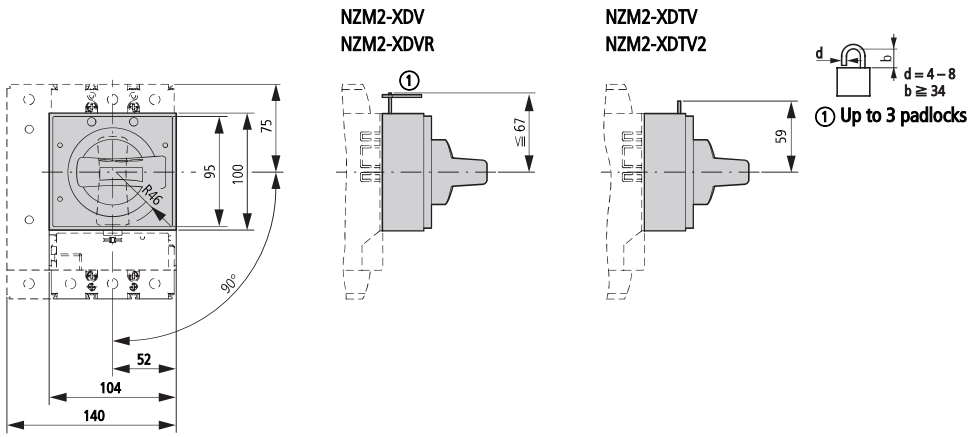

Door coupling rotary handle

NZM2-XTVD(V)(R)...

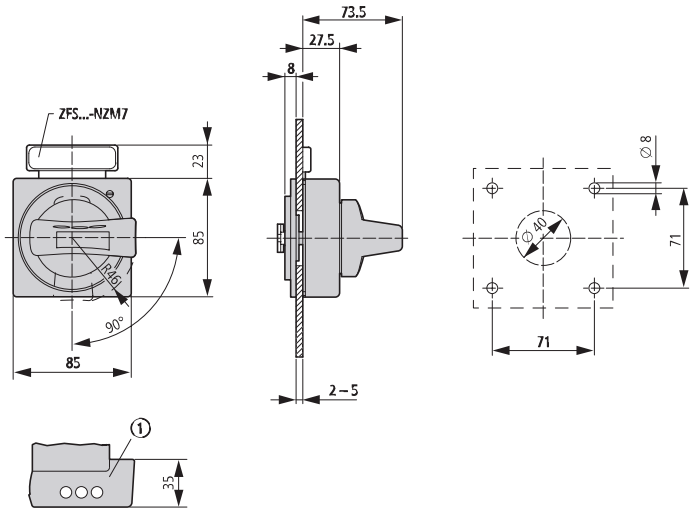

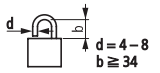

① Up to 3 padlocks

Door coupling rotary handle with extension shaft

NZM2-XTVD(V)(R)
NZM1/2-XV4(6)

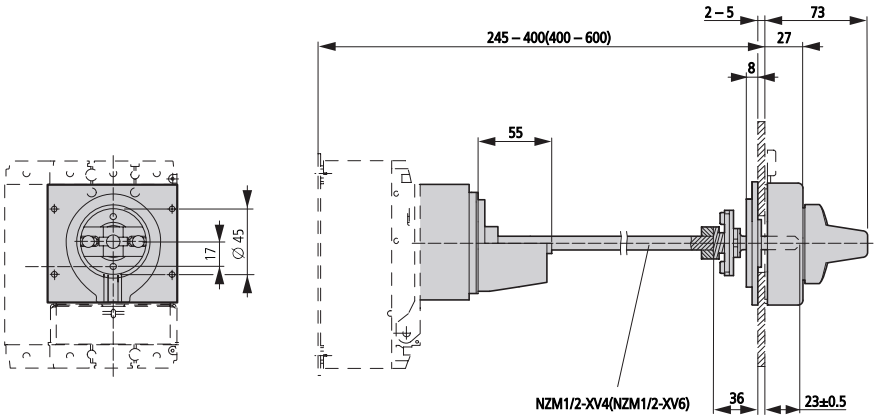

Door coupling rotary handle with extension shaft

NZM2-XTVD(V)(R)-60

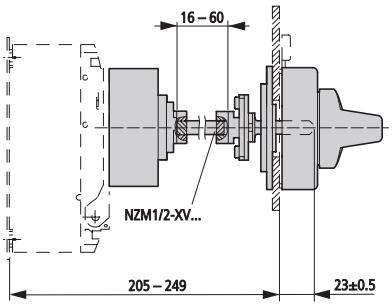

NZM2-XTVD(V)(R)-0

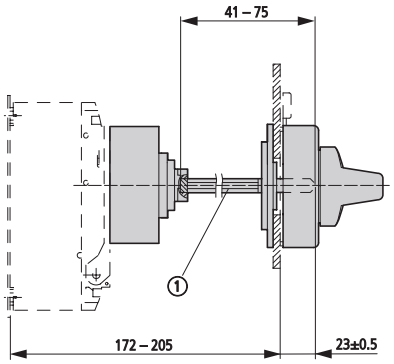

1 Special tip

Minimum door coupling rotary handle clearance from door pivot point

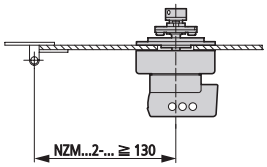

Main switch assembly kit for side panel mounting

NZM2-XS(R)-L

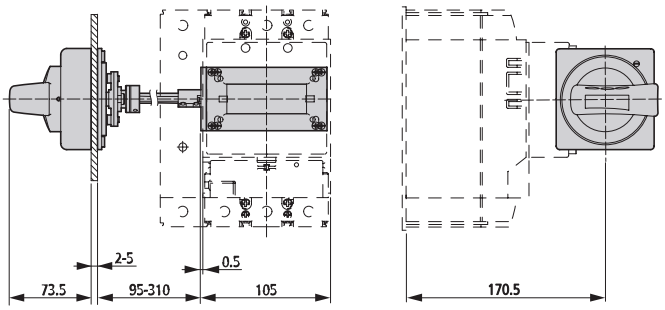

NZM2-XS(R)-R

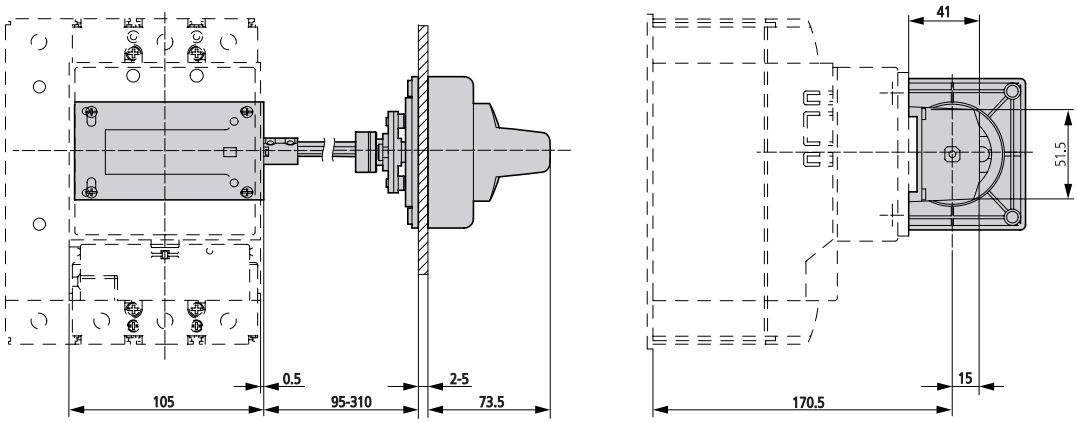

Main switch assembly kit for side panel mounting with mounting bracket

NZM2-XS(R)M-L

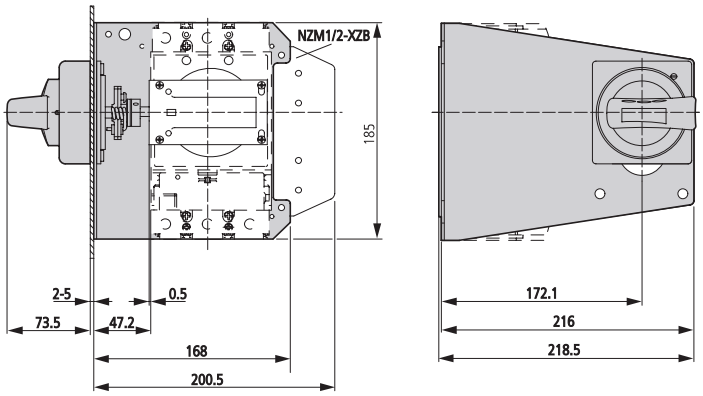

NZM2-XS(R)M-R

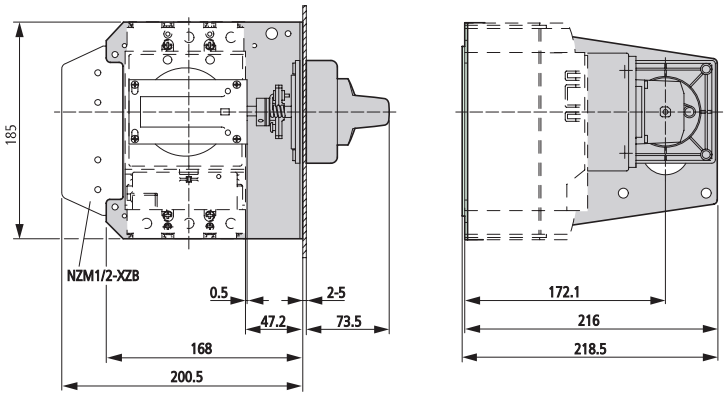

Rear drive

NZM2-XRAV

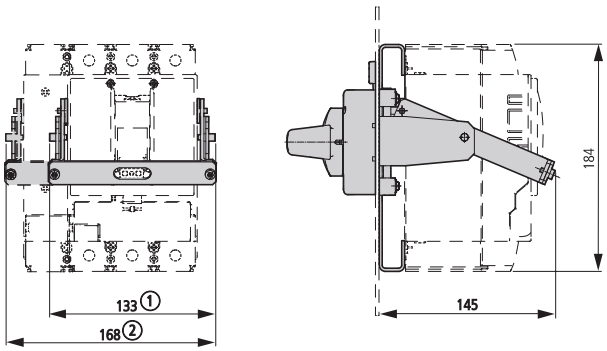

① NZM2-XRAV(R)
② NZM2-4-XRAV(R)

Spacers
NZM1/2-XAB

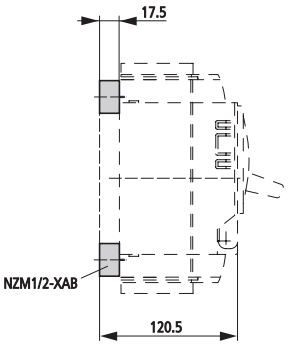

Clip plate
NZM2-XC75

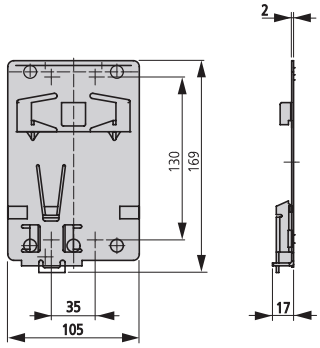

Insulating surrounds
NZM2-XBR

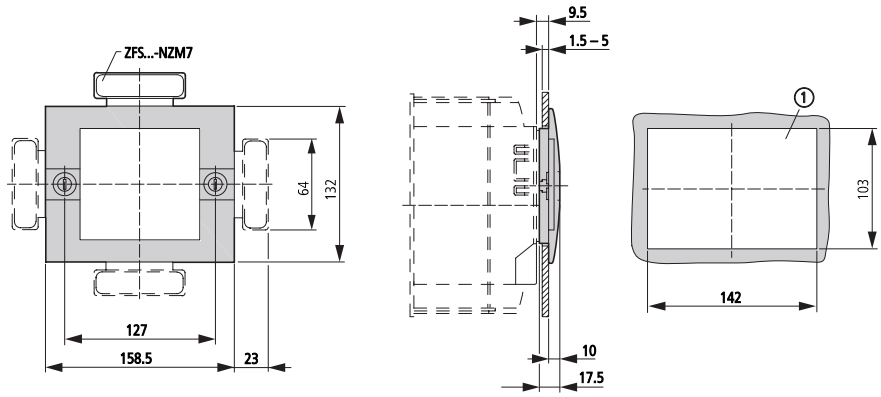

① Mounting aperture

Rotary handle on switch with door interlock
NZM2-XDTV(R)

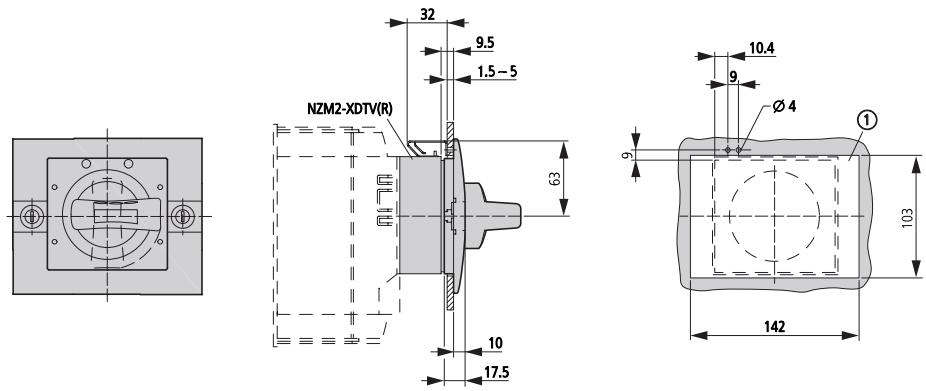

① Mounting aperture

Toggle lever locking device

NZM2/3-XKAV

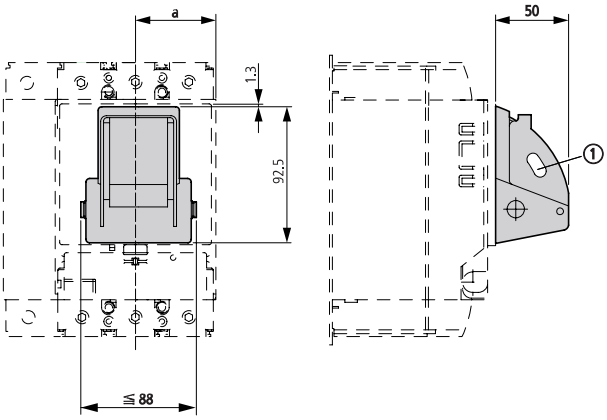

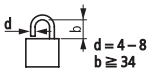

① Up to 3 padlocks

Part no.	a
LZM2	52.5
LZM3	70

Mechanical interlock

NZM2-XMV + NZM2-XD

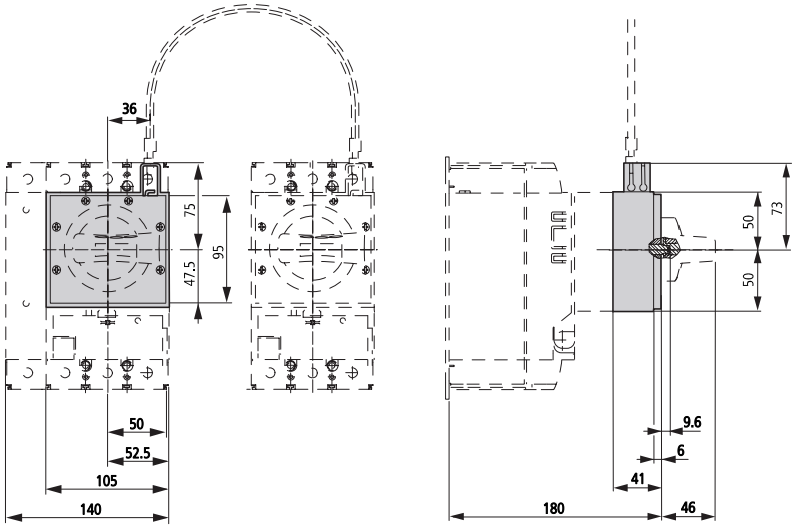

NZM2-XMV + NZM2-XTVD(V)(R)

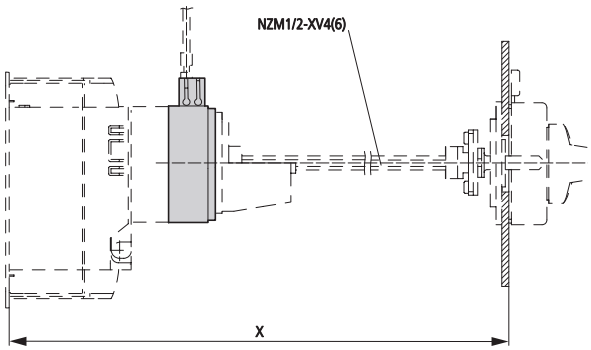

Mechanical interlock

NZM2-XMV + NZM2-XTVD(V)(R)-60

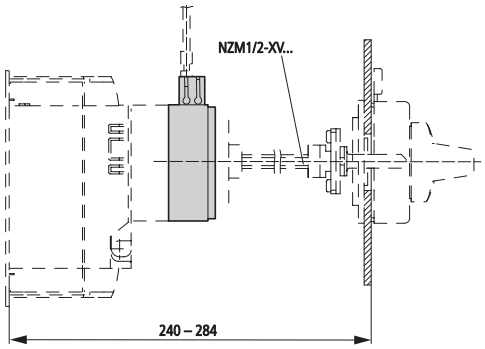

NZM2-XMV + NZM2-XT(V)D(V)(R)-0

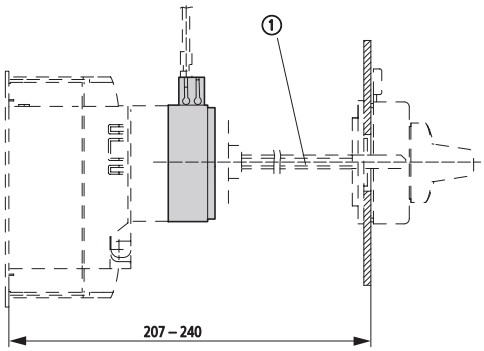

1 Special tip

Remote operator

NZM2-XR...

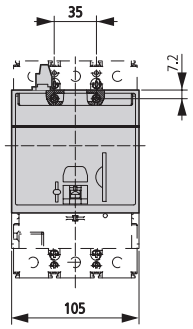

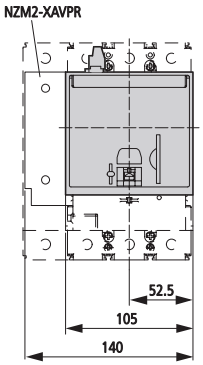

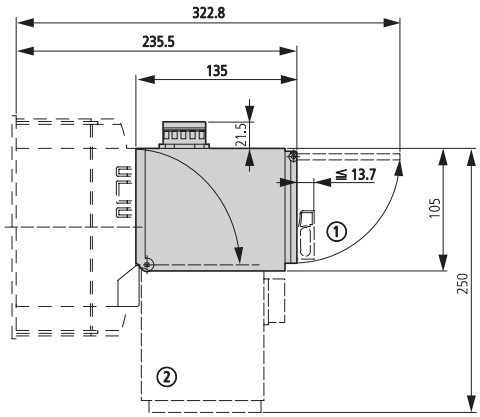

① Up to 3 padlocks

② Remote operator hinged

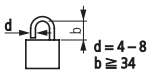

Insulated enclosures

NZM2-XCI43-T...

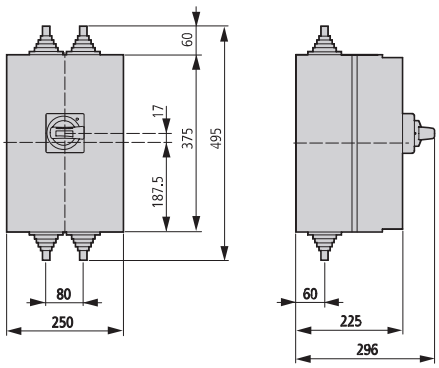

NZM2-XCI45-T...

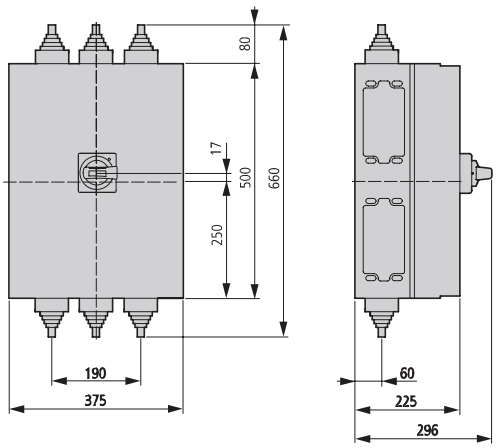

Component adapter

NZM2-XAD250

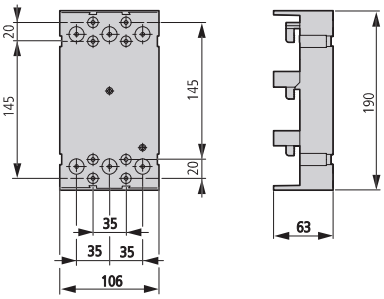

Plug-in units

+NZM2(-4)-XSV

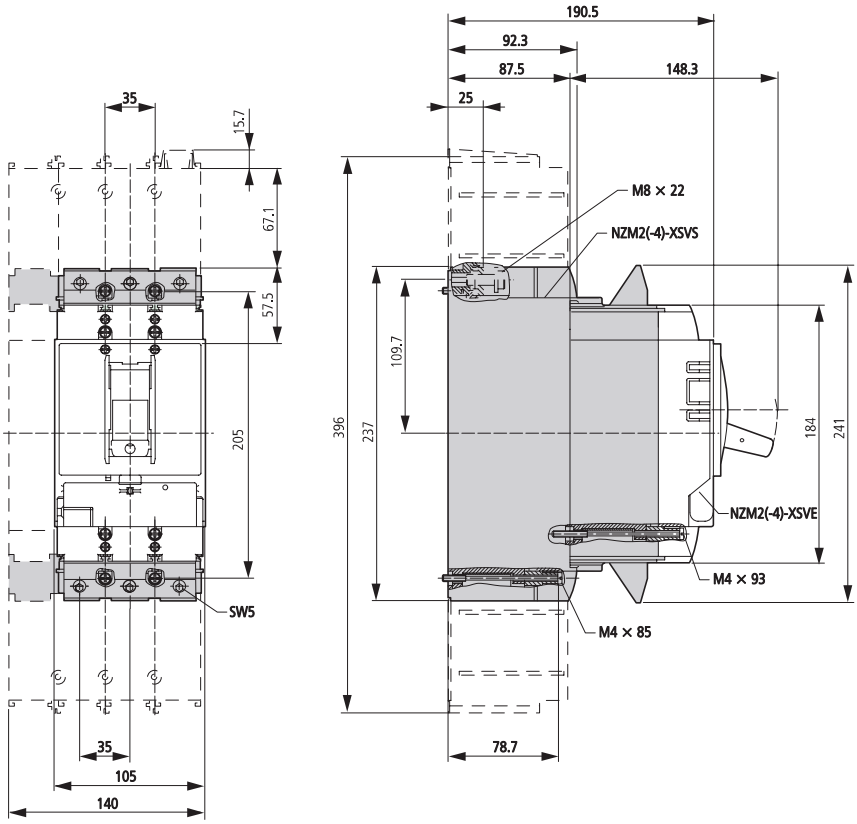

Residual-current release

NZM2(-4)-XFI...

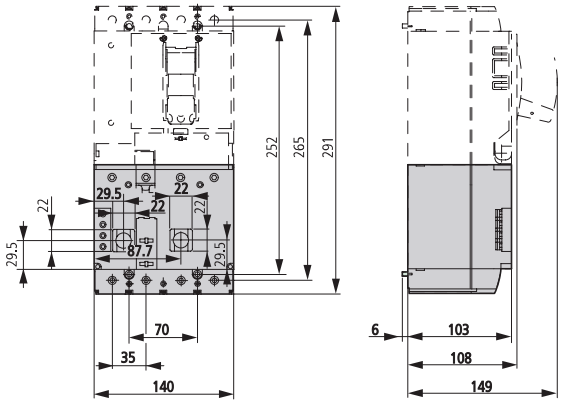

Undervoltage releases, off-delayed

UVU-NZM

Capacitor unit

NZM-XCM

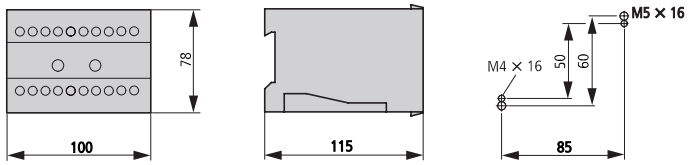

Circuit-breaker
3 pole
LZMC3
LZMN3
LZMS3

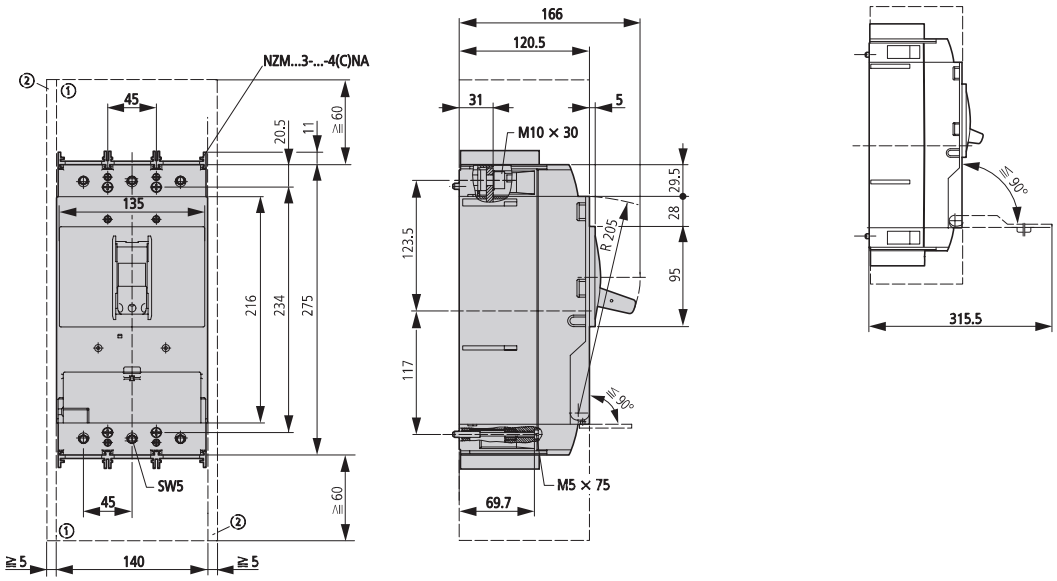

① Blow-out space, minimum distance to other parts ≧ 60 mm
② Minimum distance to adjacent parts ≧ 5 mm

Circuit-breaker
4 pole
LZMC3-4
LZMN3-4
LZMS3-4

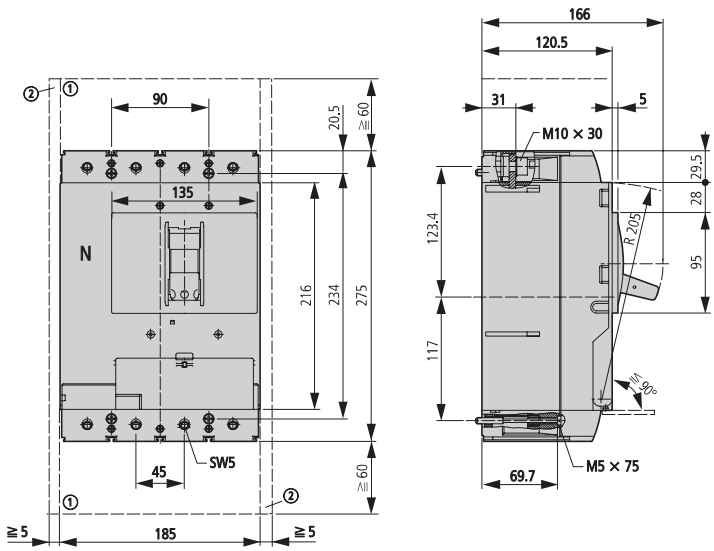

① Blow-out space, minimum distance to other parts ≧ 60 mm
② Minimum distance to adjacent parts ≧ 5 mm

Box terminal
(+)NZM3(-4)-XKC(O)(U)
IP2X protection against contact with a finger
NZM3(-4)-XIPK

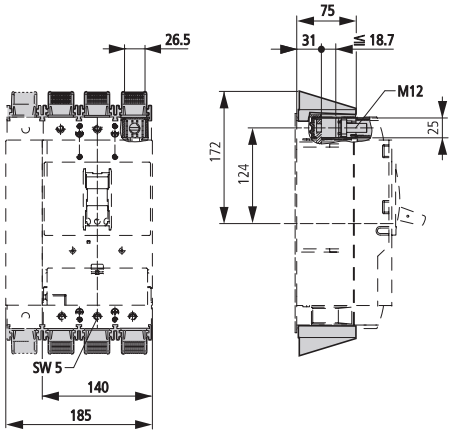

Tunnel terminal
NZM3(-4)-XKA1(2)

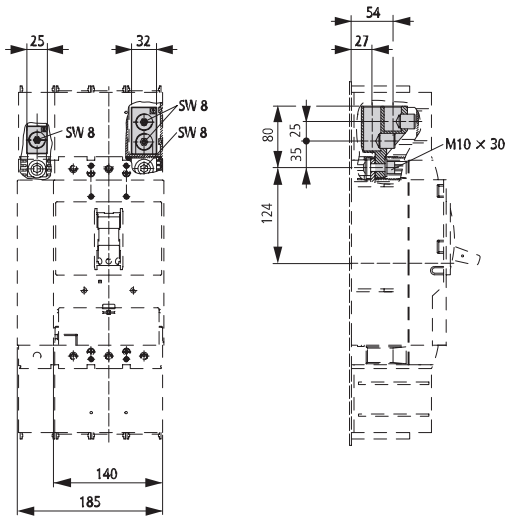

Covers
NZM3(-4)-XKSA
Cable lug
NZM3-XKS185
IP2X protection against contact with a finger
NZM3(-4)-XIPA

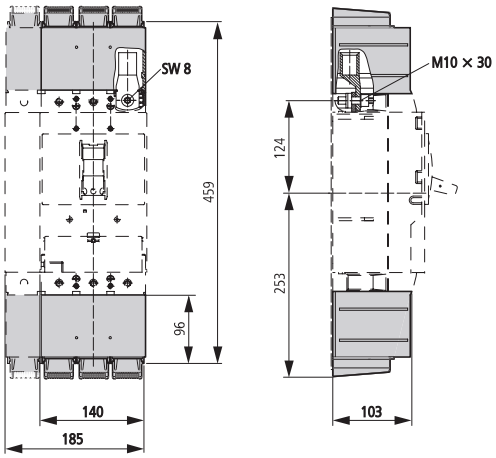

Control circuit terminal
NZM3/4-XSTS
NZM-XSTK

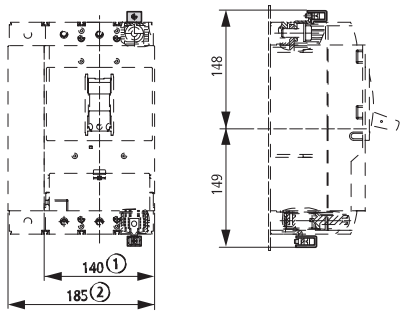

① 3 pole
② 4 pole

Connection width extension
NZM3(-4)-XKV70
Terminals
NZM3(-4)-XK22X21
NZM3(-4)-XK300

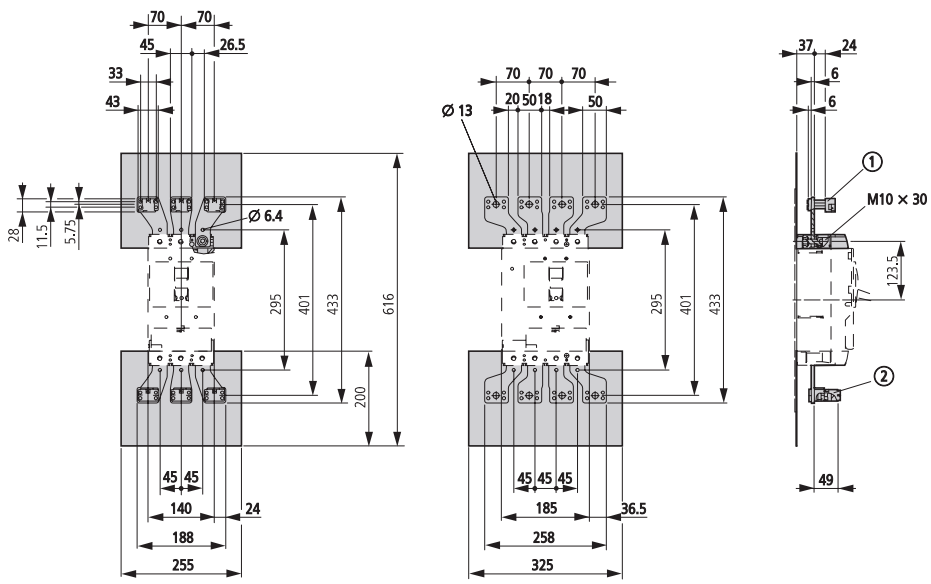

① NZM3(-4)-XK22X21
② NZM3(-4)-XK300

Connection on rear
(+)NZM3(-4)-XKR(O)(U)

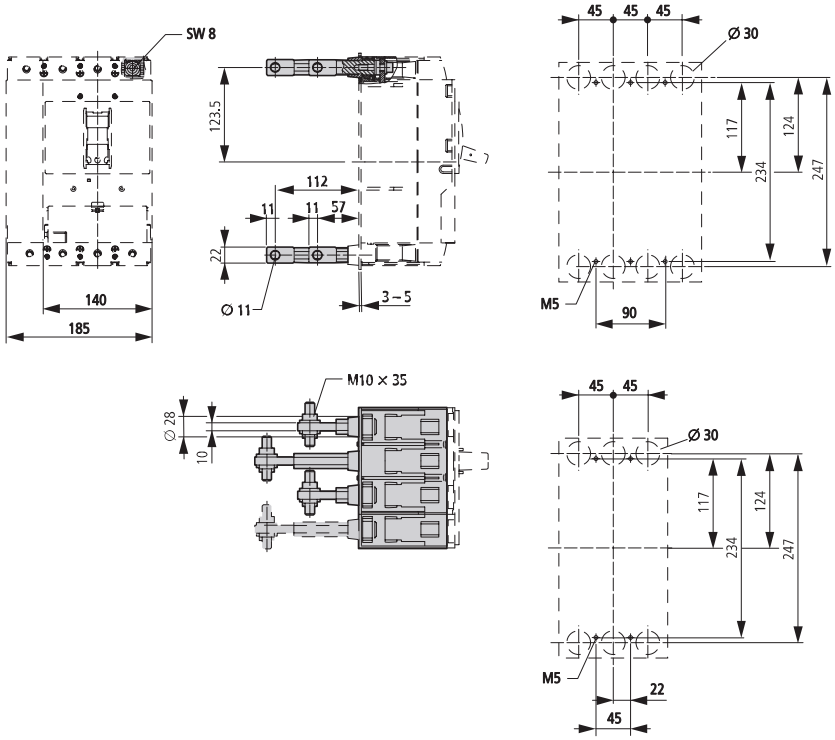

Phase isolators

NZM3-4-XKP

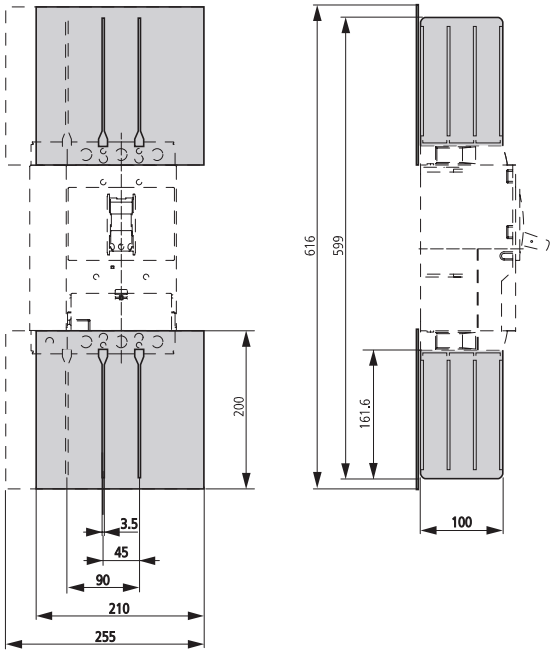

Spacers

NZM3-XAB

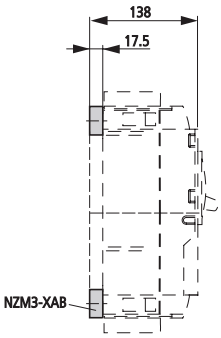

Insulating surrounds

NZM3-XBR

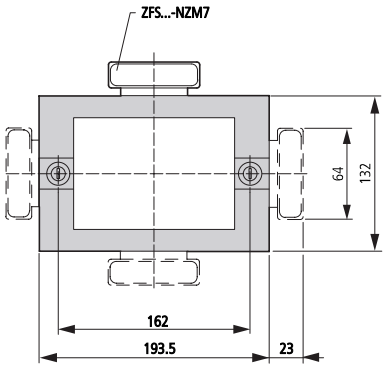

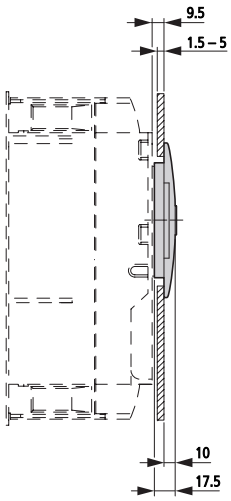

① Mounting aperture

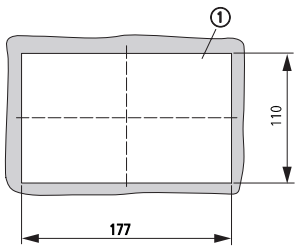

Rotary drive

Rotary handle on circuit-breaker

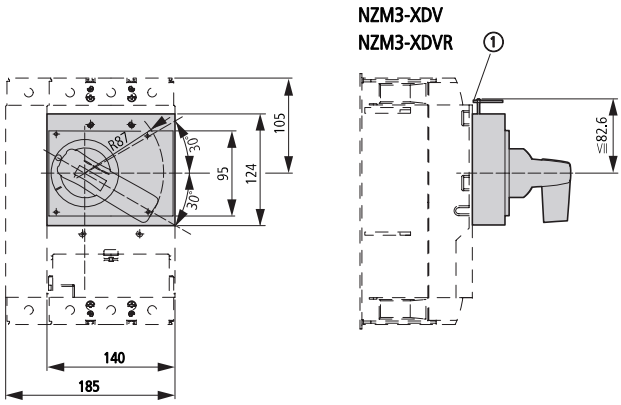

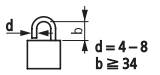

① Up to 3 padlocks

Door coupling rotary handle

NZM3-XTVD(V)(R)...

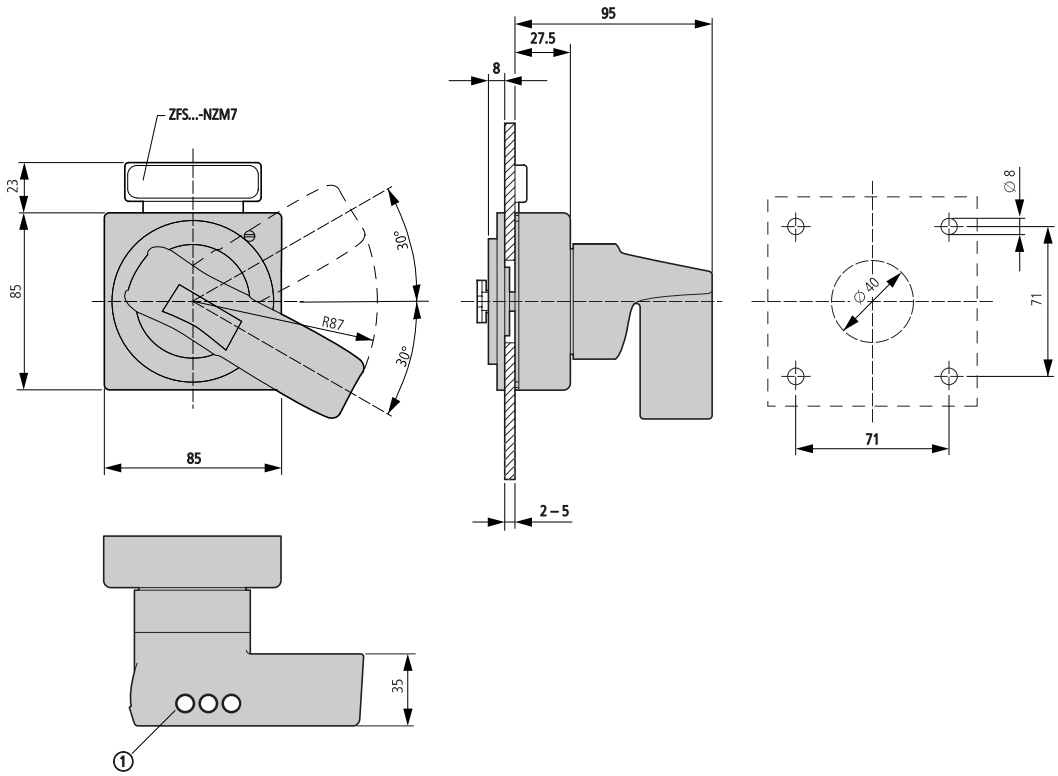

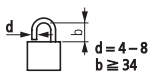

① Up to 3 padlocks

Door coupling rotary handle with extension shaft

NZM3-XTVD(V)(R)
NZM3/4-XV4(6)

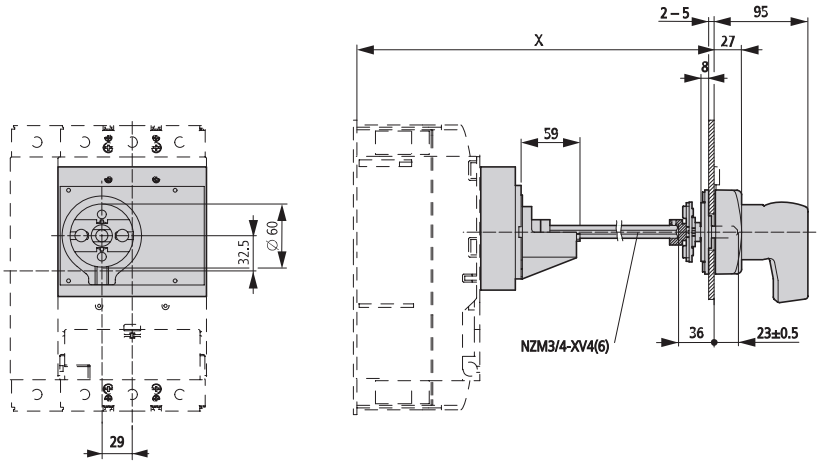

Part no.	x
NZM3/4-XV4	270 – 400
NZM3/4-XV6	400 – 600

NZM3-XTVD(V)(R)-60

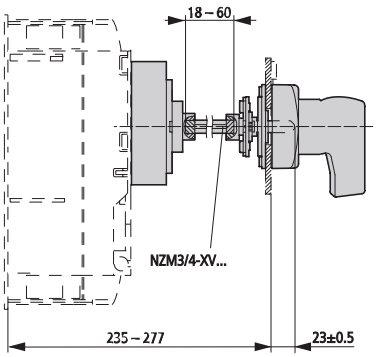

NZM3-XTVD(V)(R)-0

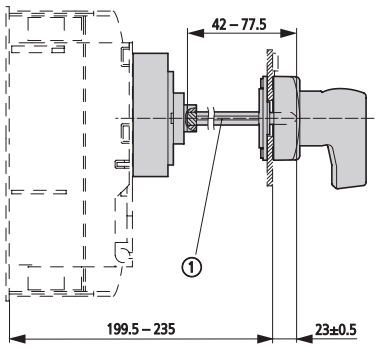

1 Special tip

Minimum door coupling rotary handle clearance from door pivot point

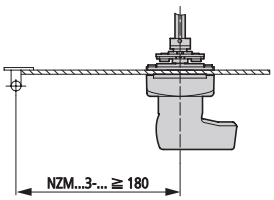

Main switch assembly kit for side panel mounting

NZM3-XS(R)-L

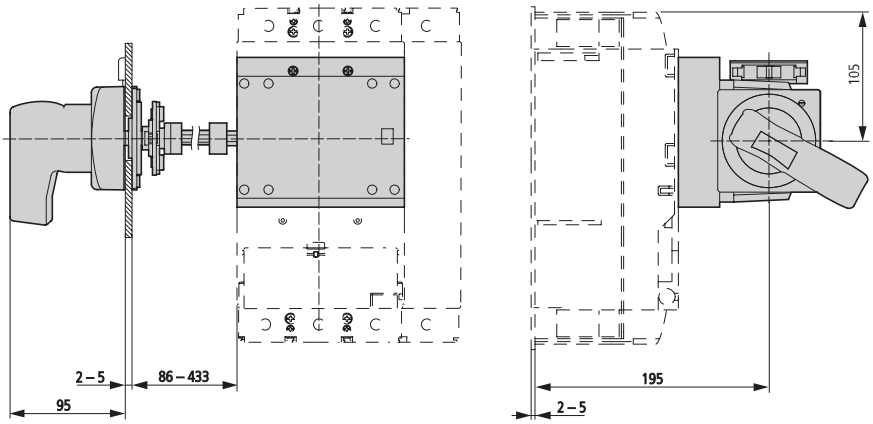

NZM3-XS(R)-R

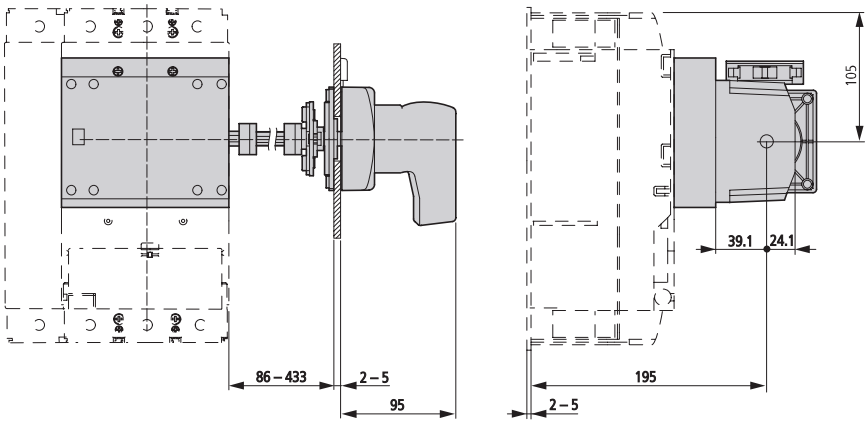

Mechanical interlock

NZM3-XMV + NZM3-XDV(R)

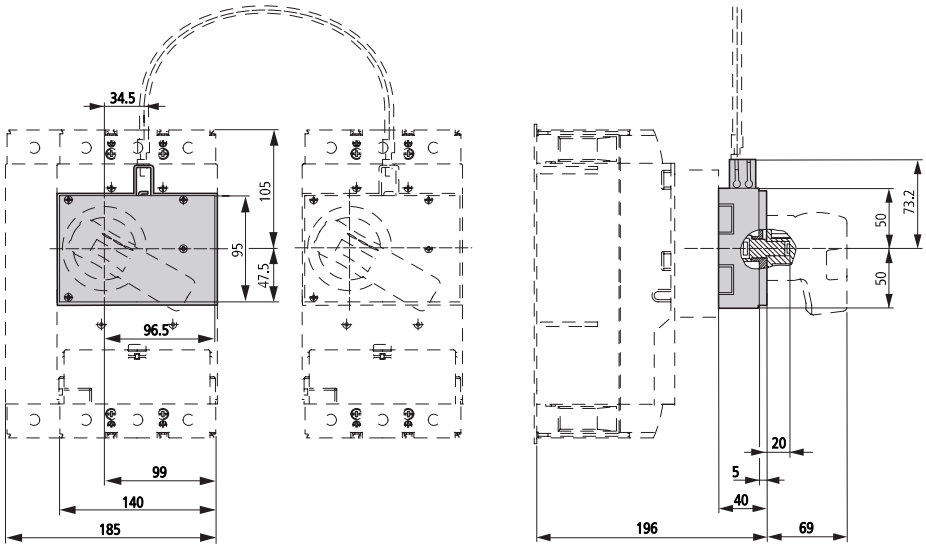

NZM3-XMV + NZM3-XTVD(V)(R)

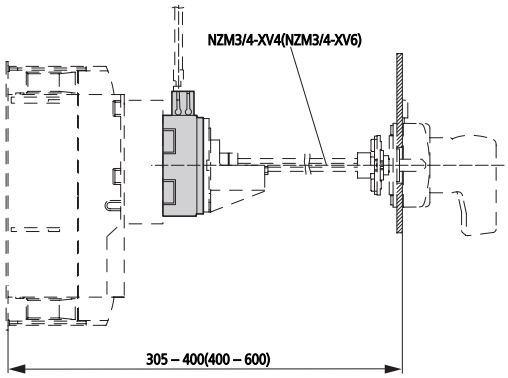

NZM3-XMV + NZM3-XTVD(V)(R)-60

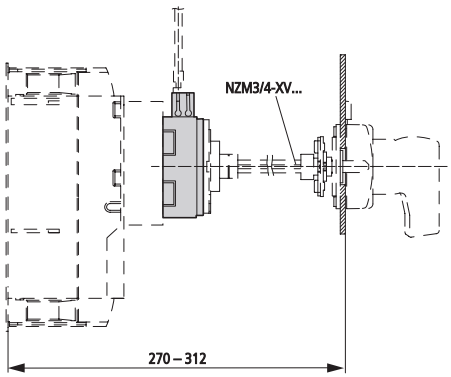

NZM3-XMV + NZM3-XTVD(V)(R)-0

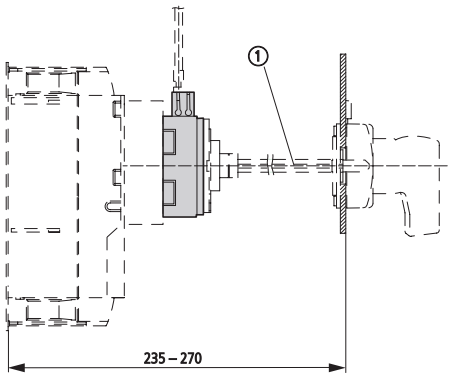

1 Special tip

Insulated enclosures

NZM3-XCI48-TD

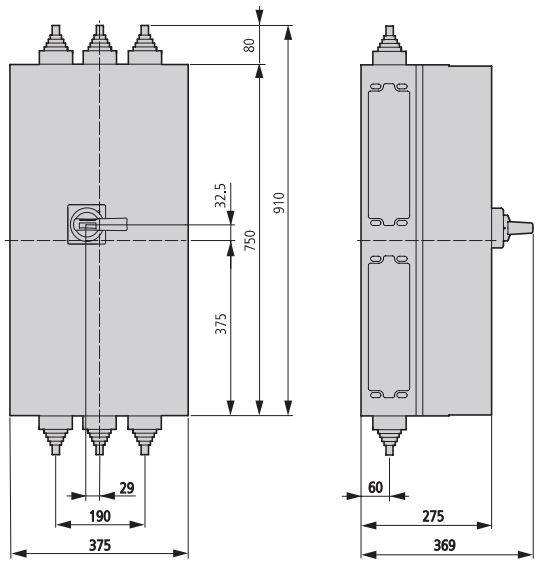

Component adapter

NZM3-XAD550

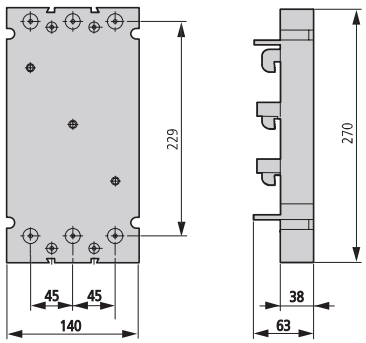

Remote operator

NZM3-XR...

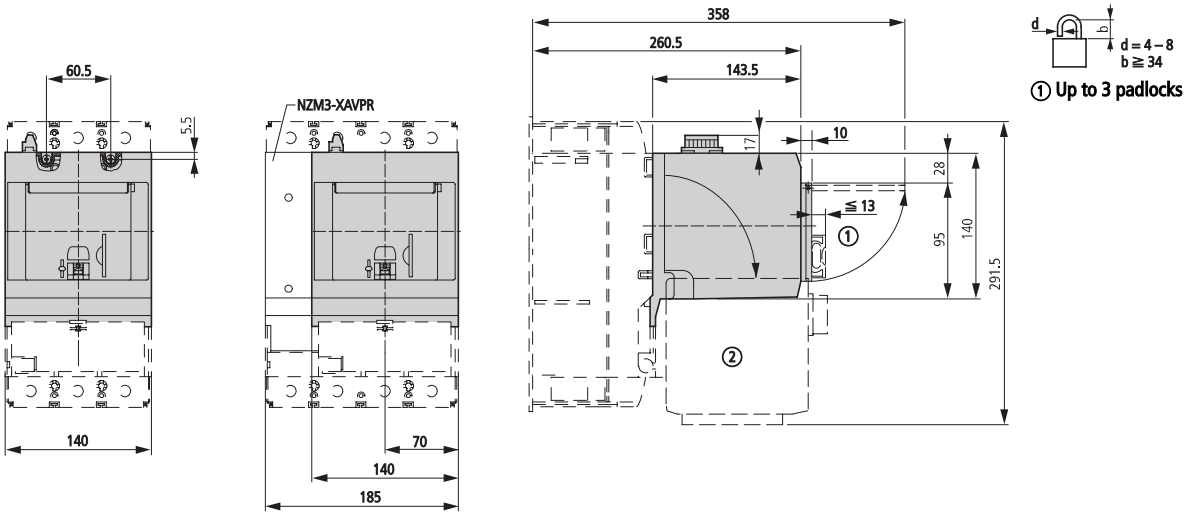

Withdrawable unit

+NZM3(-4)-XAV

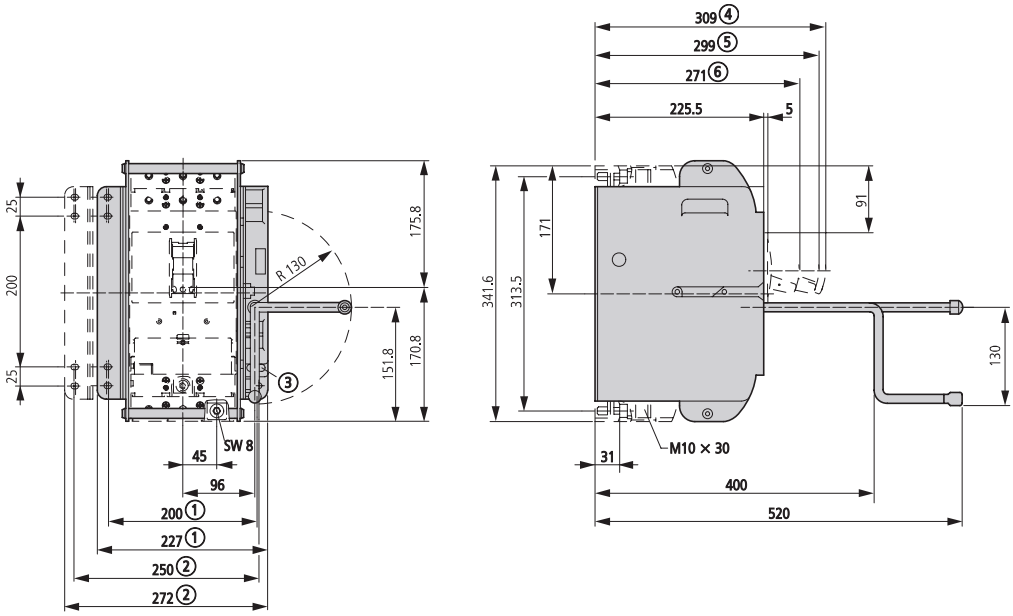

① 3-pole
② 4-pole

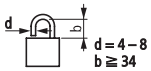

③ Up to 3 padlocks

④ withdrawn
⑤ test
⑥ connected

Circuit-breaker
3 pole
LZMN4
LZMS4

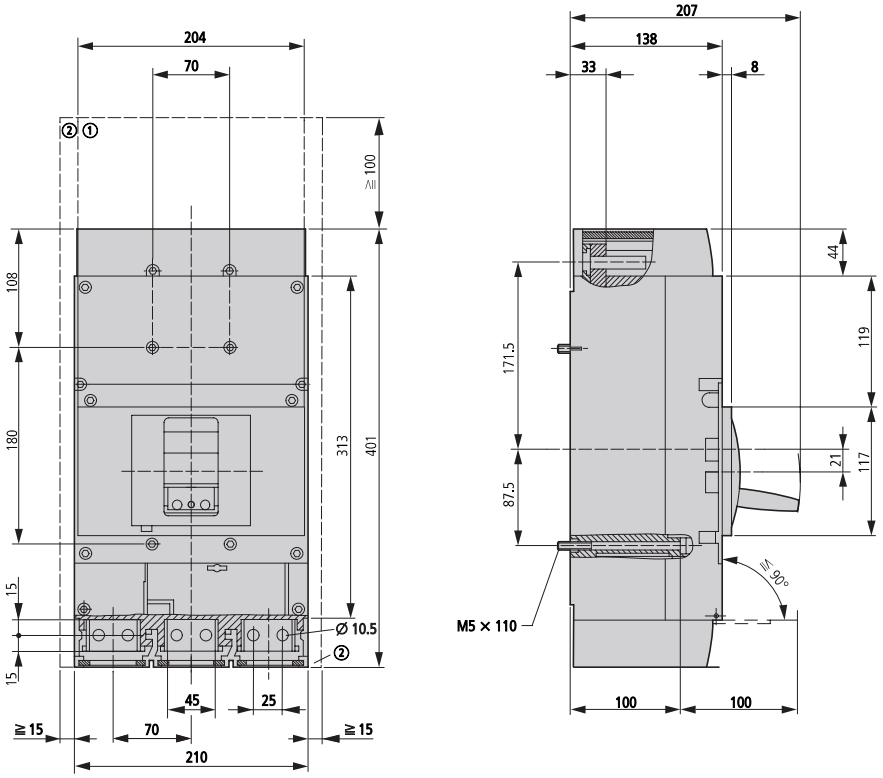

① Blow out area, minimum distance to other parts ≧ 100 mm up to 690 V
② Minimum distance to adjacent parts ≧ 15 mm

Circuit-breaker
4 pole
LZMN4-4
LZMS4-4

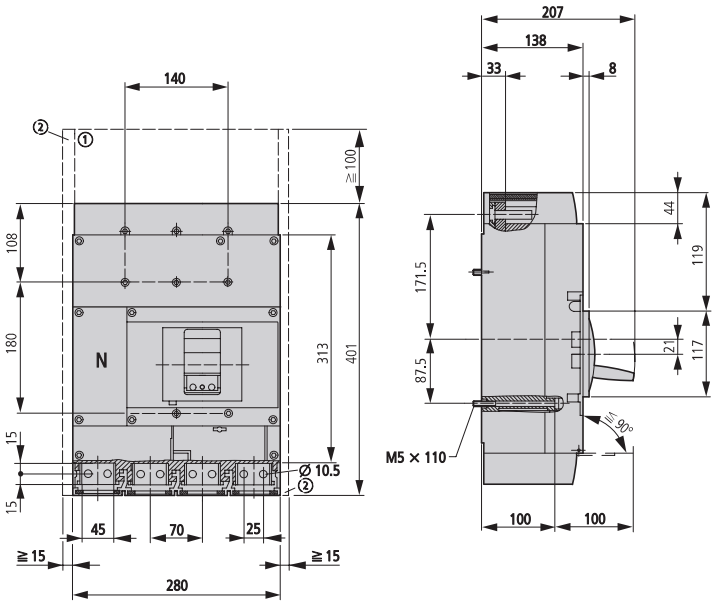

① Blow out area, minimum distance to other parts ≧ 100 mm up to 690 V
② Minimum distance to adjacent parts ≧ 15 mm

Covers
NZM4(-4)-XKSA

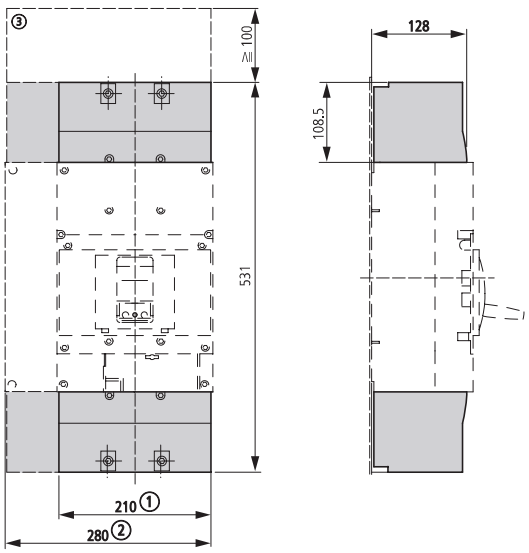

Tunnel terminal
NZM4-4-XKA

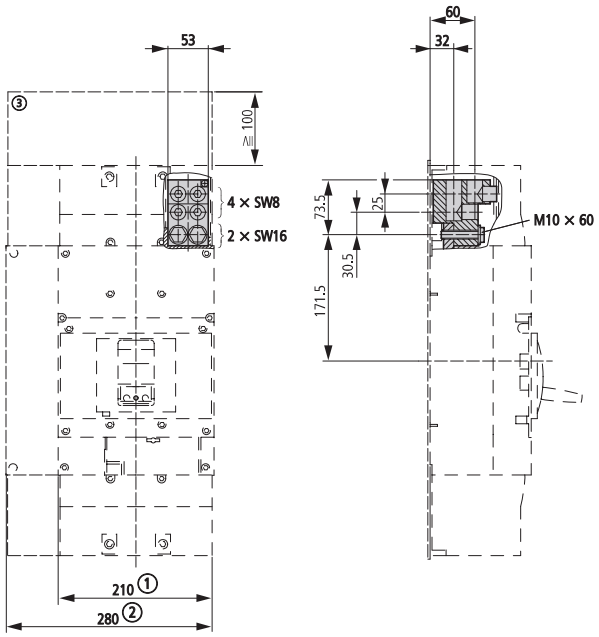

① 3 pole
② 4 pole
③ Clearance from conductive parts ≧ 100 mm up to 690 V

Screw connection

Module plate
Single hole
NZM4(-4)-XKM1
2-hole
NZM4(-4)-XKM2

Flat cable terminal
NZM4(-4)-XKB

Part no.	a	b
NZM4(-4)-XKM1	36	47
NZM4(-4)-XKM2	32	40
NZM4(-4)-XKB	–	47

① 3 pole
② 4 pole
③ Clearance from conductive parts ≧ 100 mm up to 690 V

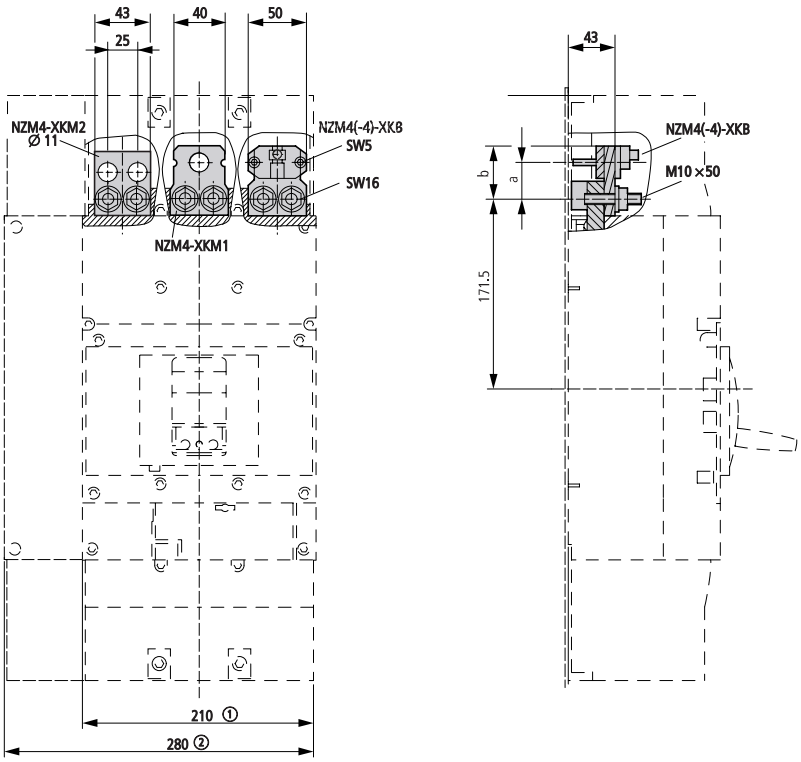

Module plate
2 holes, vertical
NZM4(-4)-XKM2S...

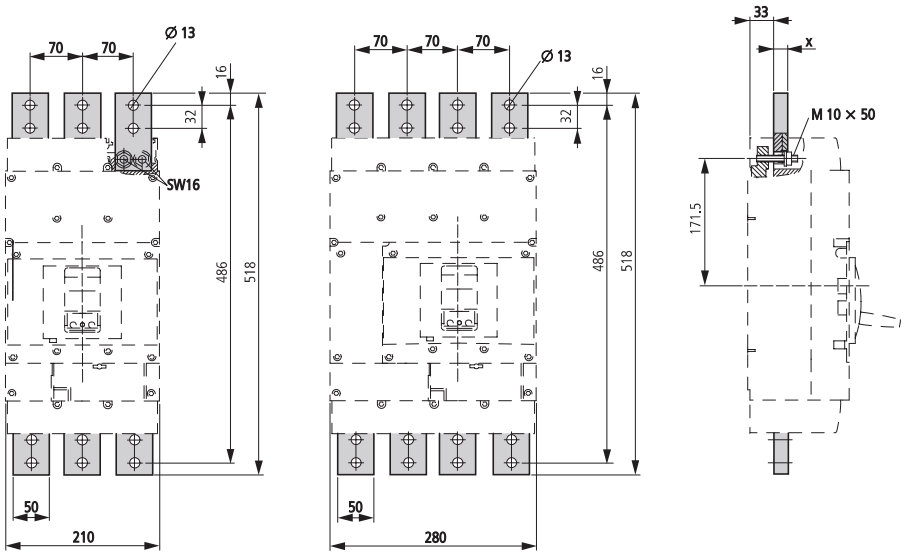

Part no.	x
NZM4(-4)-XKM2S-1250	12
NZM4(-4)-XKM2S-1600	20

Connection width extension

NZM4-XKV95

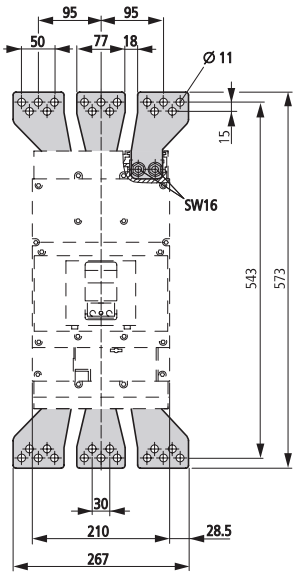

NZM4-XKV110

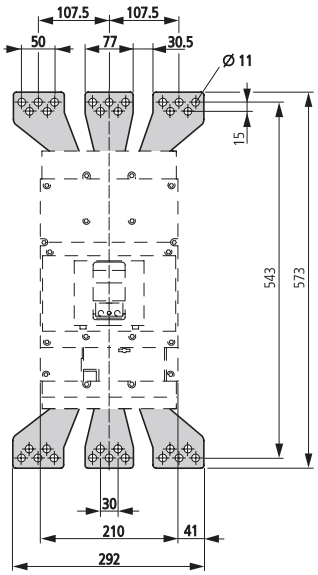

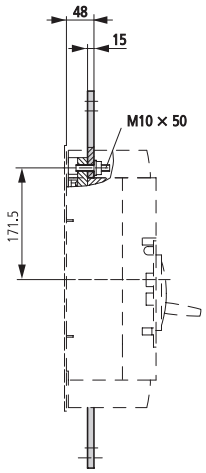

NZM4-4-XKV95

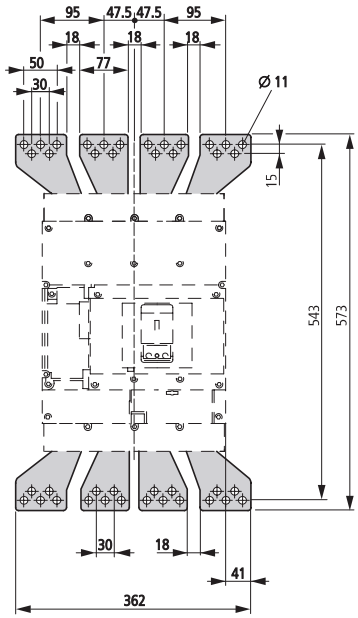

NZM4-4-XKV120

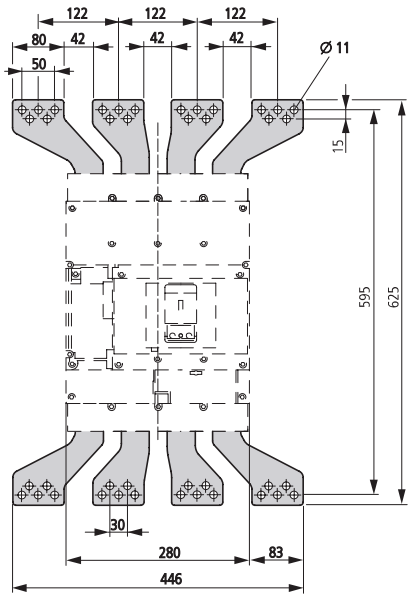

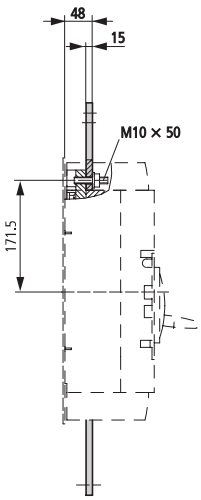

Connection on rear

NZM4(-4)-XKR

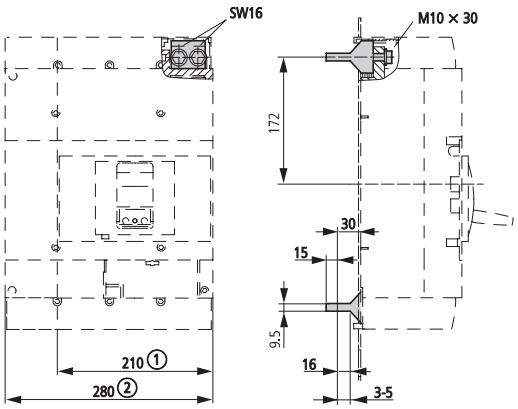

Fitting on mounting plate

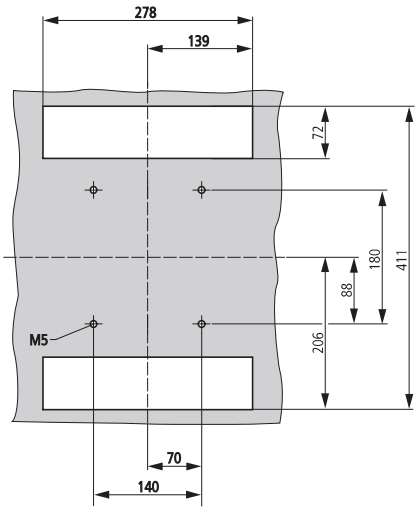

Rear connection possible also with rotation by 90°.
① 3 pole
② 4 pole

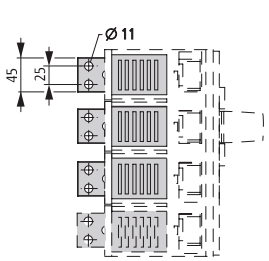

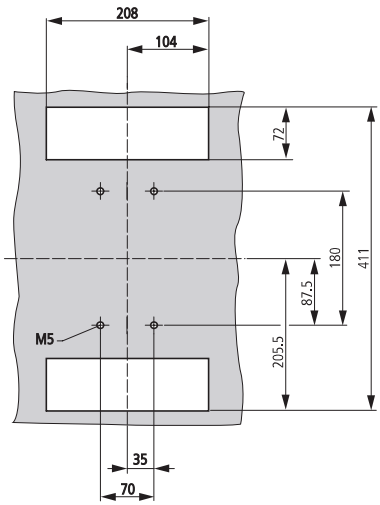

Phase isolators

NZM4-4-XKP

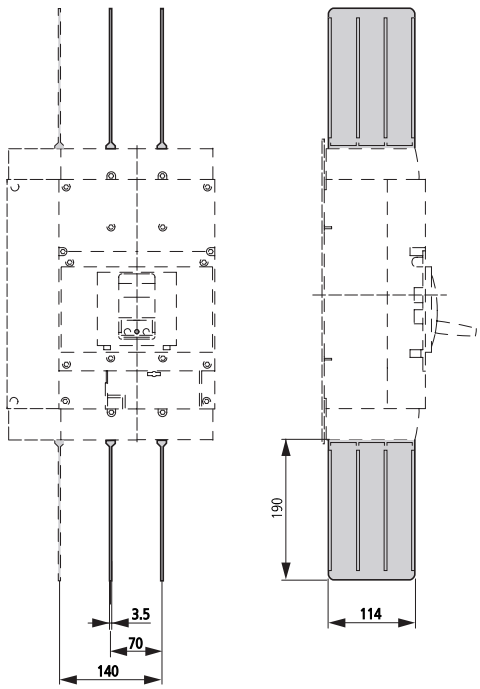

Rotary handle on circuit-breaker
NZM4-XDV(R)

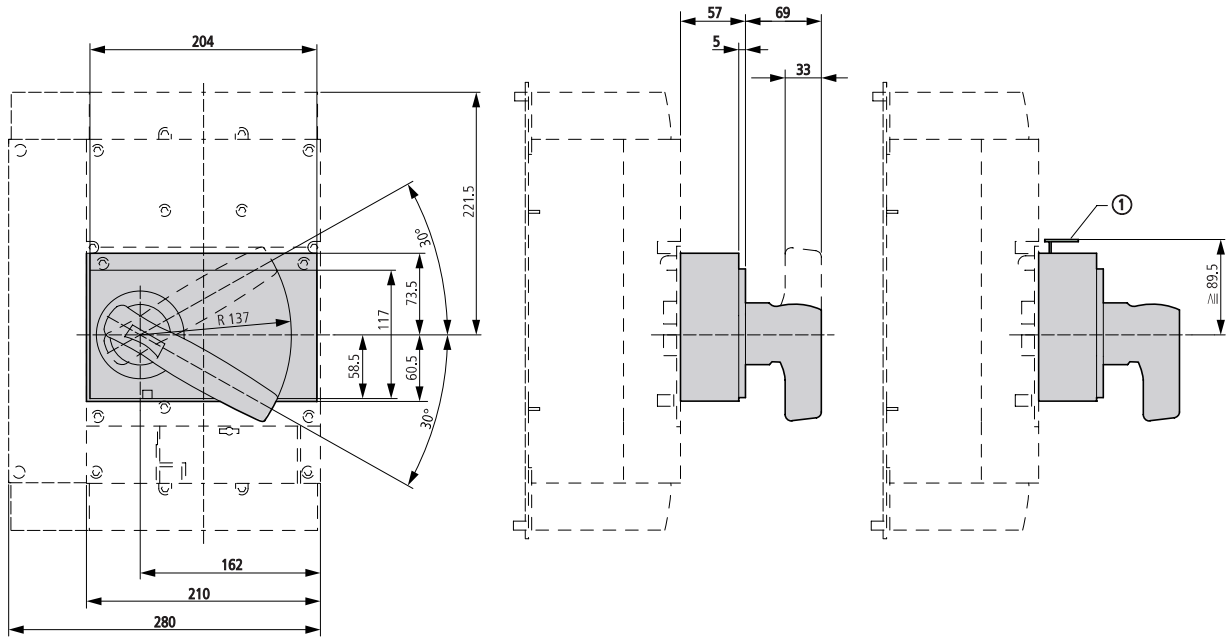

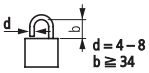

① Up to 3 padlocks

Door coupling rotary handle
NZM4-XTVD(V)(R)...

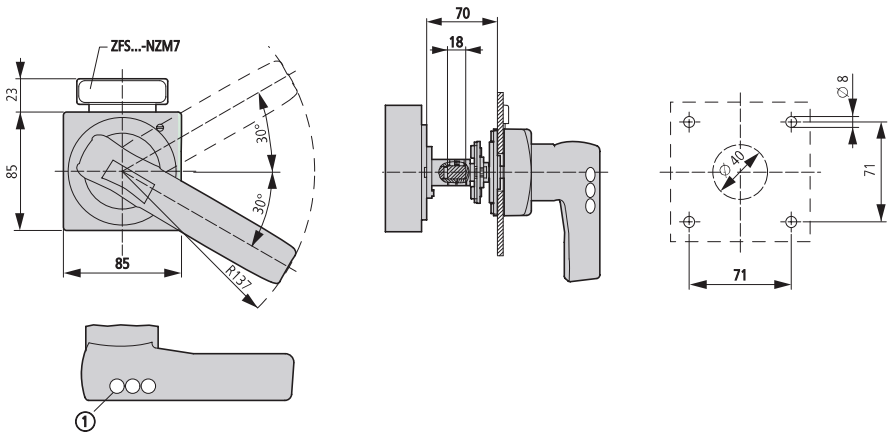

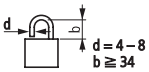

① Up to 3 padlocks

Door coupling rotary handle with extension shaft

NZM4-XTVD(V)(R)
NZM3/4-XV4(6)

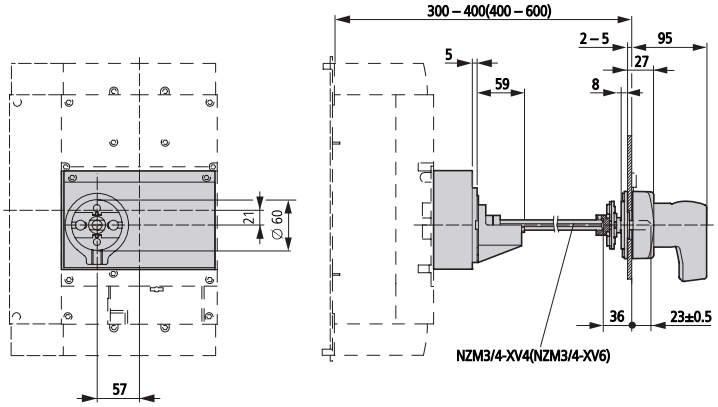

NZM4-XTVD(V)(R)-60

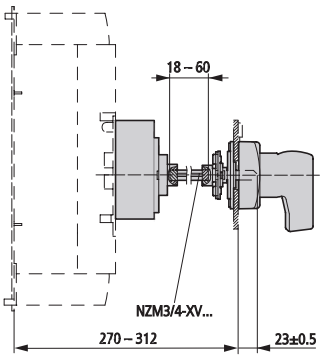

NZM4-XTVD(V)(R)-0

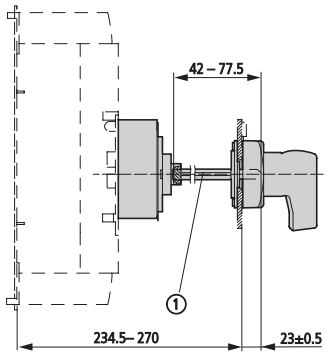

① Special tip

Minimum door coupling rotary handle clearance from door pivot point

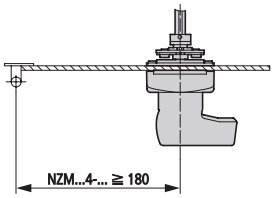

Main switch mounting kits for side-wall mounting

NZM4-XS(R)-L
NZM4-XS(R)-R

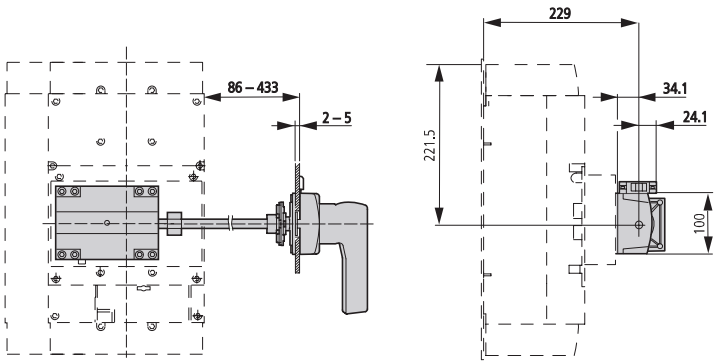

Insulating surrounds

NZM4-XBR

① Mounting aperture

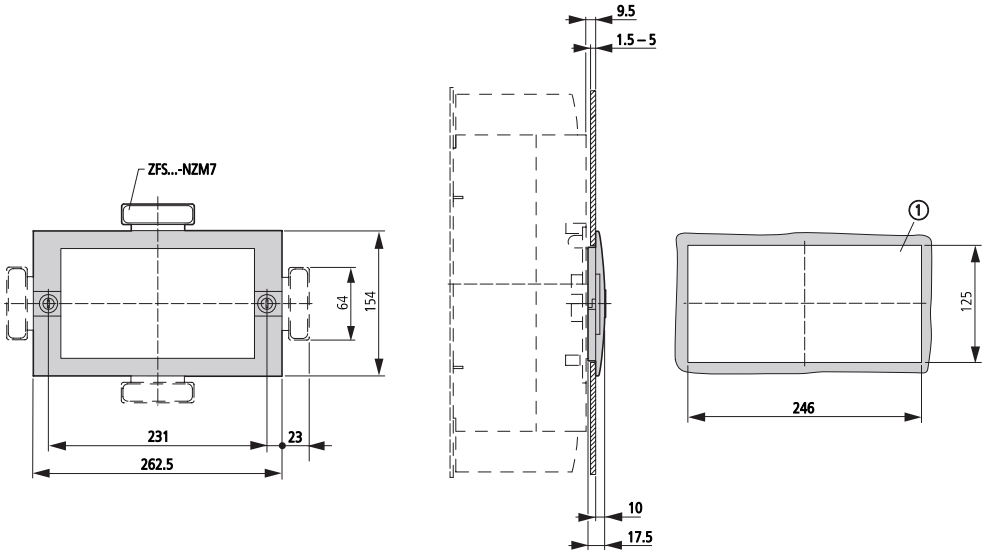

Mechanical interlock

NZM4-XMV + NZM4-XDV(R)

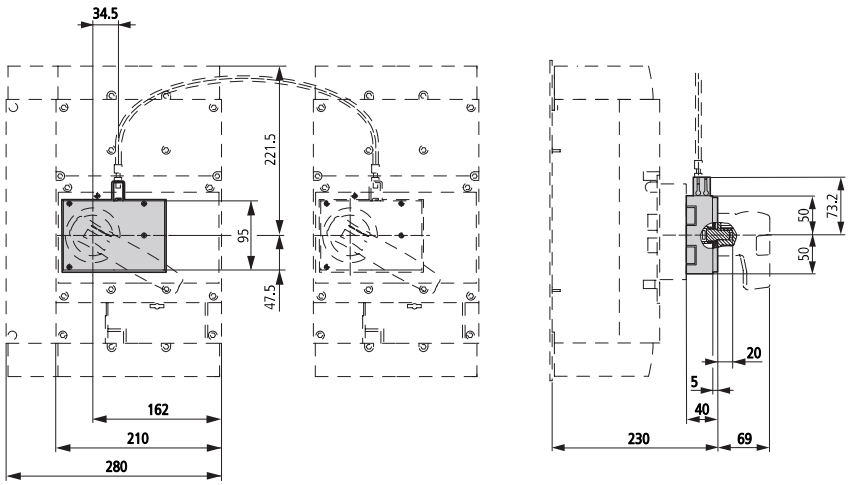

NZM4-XMV + NZM4-XTVD(V)(R)

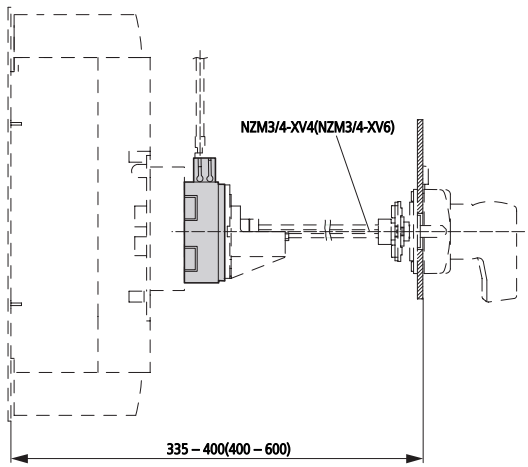

NZM4-XMV + NZM4-XTVD(V)(R)-60

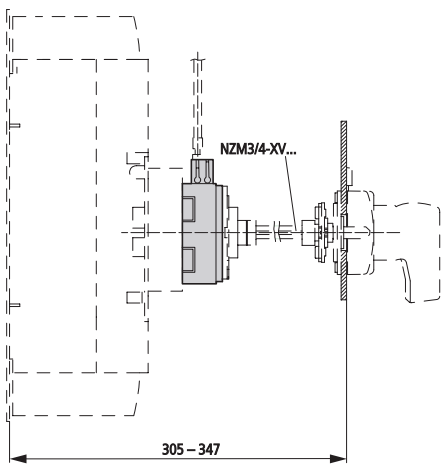

Mechanical interlock

NZM4-XMV + NZM4-XTVD(V)(R)-0

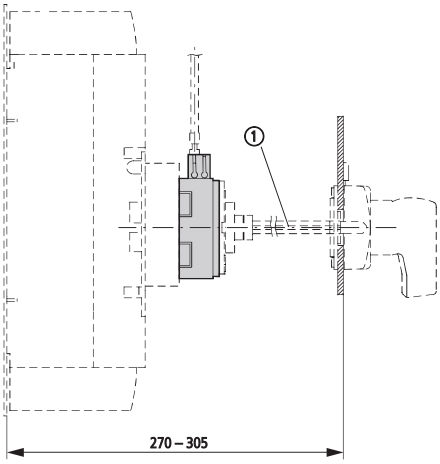

① Special tip

Remote operator

NZM4-XR…

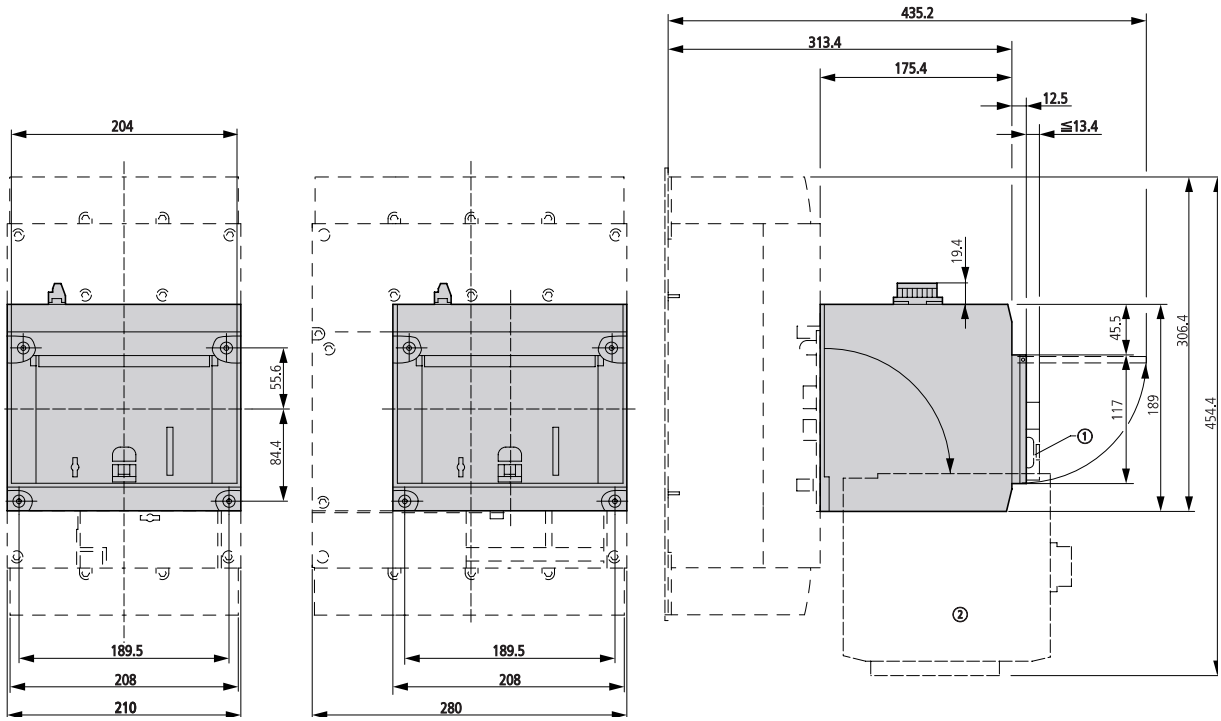

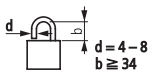

① Up to 3 padlocks
Remote operator folded

Withdrawable unit
+NZM4-4-XAV

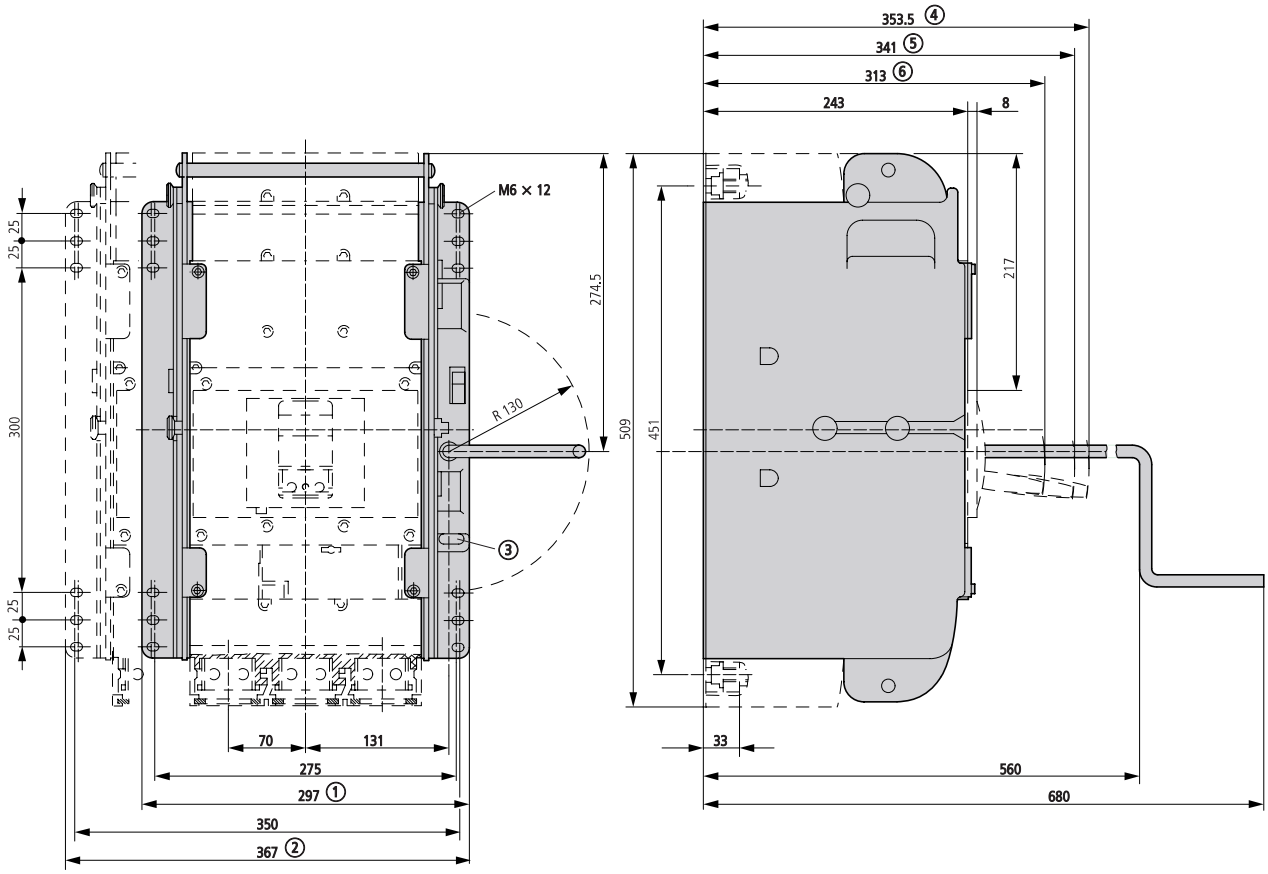

① 3-pole
② 4-pole

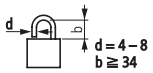

③ Up to 3 padlocks

④ Disconnected
⑤ Test
⑥ Connected